Access f or All

AN ILLUSTRATED HANDBOOK OF BARRIER FREE DESIGN FOR OHIO

by

Schooley Caldwell Associates
Architects Landscape Architects Engineers Planners

Robert D. Loversidge, Jr., AIA
and
Laura V. Shinn, AIA

and

The Ohio Governor's Council on People with Disabilities

Karla M. Lortz
Project Director

Third Edition

COPYRIGHT 1994
by
The Ohio Governor's Council on People with Disabilities
and
Schooley Caldwell Associates, Inc.

ALL RIGHTS RESERVED

Library of Congress Card Number: 93-084715

TABLE OF CONTENTS

Dedication, by Governor George Voinovich ..... **inside cover**
Acknowledgments .....
Preface ..... **vii**
Introduction ..... **viii**

Environmental Barriers **1**

Who Benefits from a Barrier-free Environment **9**

Some Thoughts on Terminology 10
People Who are Aging 11
People with Functional Limitations 12
People with Mobility Limitations 12
People with Activity Limitations 13
People with Coordination Limitations 14
People with Reach Limitations 14
People with Sight Limitations 15
People with Thermal and Tactile Sensitivity Limitations 15
People with Hearing Limitations 16
People with Cognitive Limitations 16
People with Temporary Limitations 17
People with Environmental Sensitivities 17
People Who Use Mobility Aids 18
People Who Use Communication Aids 20
People Who Use Other Aids 20

Population and Statistics **21**

Distribution of Elderly Population by County (map) 23
Visual Impairments 24
Hearing Impairments 25
People with Disabilities - Ohio 25
People Who Are Elderly - Ohio 25
Ohio Estimates of Disability Types as Primary Conditions
and Total Prevalence (chart) 26

Legislation and Regulations **29**

Federal Legislation 31
State Legislation 31
Ohio Legislation 31
Building Codes and Accessibility 32
The Impact of Legislation 33
Current Federal Legislation 33
Uniform Standards and Uniform Accessibility 38
Income Tax Deductions 39

Basic Human Dimension Data **41**

Disabilities without Dimension 48

Site Design Features 49

Site Access 51
Parking and Vehicular Considerations 54
Site Signage 56
Walkways and Curb Ramps 57
Outdoor Ramps, Stairs and Handrails 61
Gates 68
Vegetation 69
Outdoor Furniture 72
Site Lighting 74
IES Recommended Site Lighting Levels (chart) 75

Architectural Design Features 77

Building Entrances 79
Doors and Doorways 80
Accessible Routes 86
Interior Ramps, Stairs and Handrails 90
Elevators 94
Wheelchair Lifts 103
Escalators, Power Ramps and Walks 104
Toilet Rooms 106
Conveniences and Controls 116
Interior Signage 123

Housing 125

Adaptable Housing 127
- Location 127
- Entrances 128
- Doors 129
- Accessible Routes 129
- Living-Dining Areas 130
- Kitchens 131
- Bathrooms 132
- Finishes 134
- Conveniences and Controls 135
- Closets 135

Fully-Accessible Housing 136
- Entrances 136
- Circulation 136
- Kitchens 136
- Laundry 148
- Bedrooms 148
- Bathrooms 151
- Storage 155
- Windows 155
- Telephones 156
- Doors 156
- Floors 156
- Lighting 156
- Signals 156
- Garages 157
- Outdoor Spaces 159
- Community Facilities 160

Public Facilities 161

Areas of Assembly 163
Libraries 166
Museums 169
Educational Facilities 170
Health-care Facilities 175
Financial Institutions 177
Post Offices 177
Hotels and Motels 178
Restaurants and Cafeterias 182
Stadiums, Sports Arenas and Amphitheaters 184
Business Establishments 185
Recreation 187
Transportation Facilities 194
Offices and Other Places of Employment 196

Renovation and Rehabilitation 199

Procedures for Renovation and Rehabilitation 201
Accessibility Modifications 203
Site and Parking Requirements 203
Entrances 204
Doors and Doorways 207
Stairs 212
Elevator Additions and Modifications 214
Toilet Rooms 215
Drinking Fountains 218
Public Telephones 218
Controls 218
Historic Preservation and Barrier-free Design 219

Thoughts on Costs versus Benefits 225

Costs in New Construction 227
Renovation and Rehabilitation Costs 229
Indirect Costs 230
The Benefits of Accessible Design 230

Appendix I — Excerpts from the Ohio Revised Code 238
Appendix II — Excerpts from the 1992 Ohio Basic Building Code 240
Appendix III — A Brief History of Early Access Legislation 243
Appendix IV — International Symbol of Access 247

Bibliography 250
Index 253

ACKNOWLEDGMENTS

Research, development and publication of the third edition of *Access For All was* made possible by a contract between the Ohio Rehabilitation Services Commission and Schooley Caldwell Associates, Columbus, Ohio, executed at the request of the Ohio Governor's Council on People with Disabilities.

Funding for this project was provided by the Ohio Rehabilitation Services Commission and Axis Center for Public Awareness.

The Governor's Council and Schooley Caldwell Associates wish to express their sincere appreciation to members of the Advisory Committee, formed by the Project Director to assist in the preparation of *Access For* All. Their varied areas of expertise, dedication to the concept of accessibility, and willingness to review copy, provide written comments, and contribute numerous hours to committee meetings have been essential to the success of this project. A list of Advisory Committee members appears below:

***Access For All* Advisory Committee:**

Ken Campbell
Executive Director
Ohio Developmental Disabilities Planning Council
Columbus, Ohio

Rae Duncan-Lyle
Accessibility Services Coordinator
Services for Independent Living
Cleveland, Ohio

Stephen P. Hansler
Chair
Environmental Concerns Committee
Governor's Council on People with Disabilities
Cleveland, Ohio

Joe Koncellic
Professor
Department of Industrial Design
The Ohio State University
Columbus, Ohio

Karla M. Lortz
Executive Secretary
Governor's Council on People with Disabilities
Columbus, Ohio

Robert A. Lynch
Counsellor at Law
Baker & Hostetler
Columbus, Ohio

Linda McQuistion, Ph.D., P.E.
Rehabilitation Engineer
Ohio Rehabilitation Services Commission
Columbus, Ohio

Ray Miklethun
Director of Development
Housing Resource Center
Cleveland, Ohio

John Roush
Architect
C.A.E. McGettrick, Inc.
Cleveland, Ohio

Cheryl Sillenpaa
Coordinator for Student Development
Ohio State School for the Deaf
Columbus, Ohio

Jan Sokolnicki
Planning Supervisor
Ohio Board of Building Standards
Columbus, Ohio

Barbara Turley
Former Public Information Officer
Ohio Rehabilitation Services Commission
Columbus, Ohio

Lee Wakley
EMPSC Administrator
Ohio Department of Aging
Columbus, Ohio

Winnie Walker
Environmental Concerns Committee
Governor's Council on People With Disabilities
New Philadelphia, Ohio

Daniel Wasmund
Environmental Concerns Committee
Governor's Council on People with Disabilities
Marietta, Ohio

Special thanks are also in order for additional advice and counsel contributed by: Wayne Meyer, AIA, Arcodect, Inc.; Gene Becker, BOCA; Hank Arnold, Division of Elevator Inspectors; Robert Greaff, Director of the Center for Product & Environmental Design, Virginia Polytechnic University; Al Eisenberg, AIA, Washington; Steve Cross, Central Ohio Wheelchair; Ben Nugent, Access Able; and Dale Beavers, Touch Choice, Inc., whose menu board prototype was also photographed.

Thanks also to Elizabeth Aino and the previous *Access for All* advisory committee for their vision which made the first edition of *Access for* All possible in 1977.

Photographs for *Access For All* were taken by Schooley Caldwell Associates unless otherwise noted. A special thanks to our models for their patience and good humor:

Herb Beatty II
Jim Behner
Dorothy E. Bell
Rose Brimi
Raymond L. Byers and Snip
Marcus Canaday and Laser
Kristyn Ann Elliott
Mary Edna Fox
Mark Harris
Debra K. Holloway
Elizabeth Kannard
Karla M. Lortz and Bruce
Beverly J. Rackett
Mark E. Seifarth
Charles H. Snow and Slurp

Photographs for *Access For* All were taken at the following accessible locations:

Ohio Rehabilitation Services Commission offices, Vern Riffe Center for Government and the Arts, Hutchinson Avenue Holiday Inn, Nationwide Plaza and Atrium, Society Bank (Bethel/Olentangy branch), Blacklick Woods Metropolitan Park, Columbus City Hall, Ohio Statehouse, Bexley Public Library, The Ohio State University, The Columbus Foundation, St. Mary's Catholic Church, Worthington Kilborne High School, the Upper Arlington Municipal Services Building and Creative Living II.

The assistance of all who made these photographs possible is appreciated.

Some photographs were provided to us by others; these photos were provided by the following individuals and organizations:

Ohio Department of Aging
Maximum Independent Living (Steven P. Hansler)
Imex Healthcare
Leisure Lift
Pilot Dogs, Inc.
Central Ohio Transit Authority
Environmental Concerns Committee of the Governor's Council on People with Disabilities (Winnie Walker)
Amtrack
Easter Seals
Ultratec
Ohio Rehabilitation Services Commission

Schooley Caldwell Associates, Inc. personnel who contributed to this project include:

Robert D. Loversidge, Jr., AIA, Principal-in-Charge
Laura V. Shinn, AIA, Project Architect, research, text, illustrations and photography
Alan F. Seaman, Landscape Architect, research, text, illustrations and photography
Genie S. Morgan, Publications Coordinator, editing, design and layout
Timothy J. Shepperd, Computer Systems Manager, CADD, graphics, and systems interface

ACKNOWLEDGMENTS

Research, development and publication of the third edition of *Access For All was* made possible by a contract between the Ohio Rehabilitation Services Commission and Schooley Caldwell Associates, Columbus, Ohio, executed at the request of the Ohio Governor's Council on People with Disabilities.

Funding for this project was provided by the Ohio Rehabilitation Services Commission and Axis Center for Public Awareness.

The Governor's Council and Schooley Caldwell Associates wish to express their sincere appreciation to members of the Advisory Committee, formed by the Project Director to assist in the preparation of *Access For* All. Their varied areas of expertise, dedication to the concept of accessibility, and willingness to review copy, provide written comments, and contribute numerous hours to committee meetings have been essential to the success of this project. A list of Advisory Committee members appears below:

***Access For All* Advisory Committee:**

Ken Campbell
Executive Director
Ohio Developmental Disabilities Planning Council
Columbus, Ohio

Rae Duncan-Lyle
Accessibility Services Coordinator
Services for Independent Living
Cleveland, Ohio

Stephen P. Hansler
Chair
Environmental Concerns Committee
Governor's Council on People with Disabilities
Cleveland, Ohio

Joe Koncellic
Professor
Department of Industrial Design
The Ohio State University
Columbus, Ohio

Karla M. Lortz
Executive Secretary
Governor's Council on People with Disabilities
Columbus, Ohio

Robert A. Lynch
Counsellor at Law
Baker & Hostetler
Columbus, Ohio

Linda McQuistion, Ph.D., P.E.
Rehabilitation Engineer
Ohio Rehabilitation Services Commission
Columbus, Ohio

Ray Miklethun
Director of Development
Housing Resource Center
Cleveland, Ohio

John Roush
Architect
C.A.E. McGettrick, Inc.
Cleveland, Ohio

Cheryl Sillenpaa
Coordinator for Student Development
Ohio State School for the Deaf
Columbus, Ohio

Jan Sokolnicki
Planning Supervisor
Ohio Board of Building Standards
Columbus, Ohio

Barbara Turley
Former Public Information Officer
Ohio Rehabilitation Services Commission
Columbus, Ohio

Lee Wakley
EMPSC Administrator
Ohio Department of Aging
Columbus, Ohio

Winnie Walker
Environmental Concerns Committee
Governor's Council on People With Disabilities
New Philadelphia, Ohio

Daniel Wasmund
Environmental Concerns Committee
Governor's Council on People with Disabilities
Marietta, Ohio

Special thanks are also in order for additional advice and counsel contributed by: Wayne Meyer, AIA, Arcodect, Inc.; Gene Becker, BOCA; Hank Arnold, Division of Elevator Inspectors; Robert Greaff, Director of the Center for Product & Environmental Design, Virginia Polytechnic University; Al Eisenberg, AIA, Washington; Steve Cross, Central Ohio Wheelchair; Ben Nugent, Access Able; and Dale Beavers, Touch Choice, Inc., whose menu board prototype was also photographed.

Thanks also to Elizabeth Aino and the previous *Access for All* advisory committee for their vision which made the first edition of *Access for* All possible in 1977.

Photographs for *Access For All* were taken by Schooley Caldwell Associates unless otherwise noted. A special thanks to our models for their patience and good humor:

Herb Beatty II
Jim Behner
Dorothy E. Bell
Rose Brimi
Raymond L. Byers and Snip
Marcus Canaday and Laser
Kristyn Ann Elliott
Mary Edna Fox
Mark Harris
Debra K. Holloway
Elizabeth Kannard
Karla M. Lortz and Bruce
Beverly J. Rackett
Mark E. Seifarth
Charles H. Snow and Slurp

Photographs for *Access For* All were taken at the following accessible locations:

Ohio Rehabilitation Services Commission offices, Vern Riffe Center for Government and the Arts, Hutchinson Avenue Holiday Inn, Nationwide Plaza and Atrium, Society Bank (Bethel/Olentangy branch), Blacklick Woods Metropolitan Park, Columbus City Hall, Ohio Statehouse, Bexley Public Library, The Ohio State University, The Columbus Foundation, St. Mary's Catholic Church, Worthington Kilborne High School, the Upper Arlington Municipal Services Building and Creative Living II.

The assistance of all who made these photographs possible is appreciated.

Some photographs were provided to us by others; these photos were provided by the following individuals and organizations:

Ohio Department of Aging
Maximum Independent Living (Steven P. Hansler)
Imex Healthcare
Leisure Lift
Pilot Dogs, Inc.
Central Ohio Transit Authority
Environmental Concerns Committee of the Governor's Council on People with Disabilities (Winnie Walker)
Amtrack
Easter Seals
Ultratec
Ohio Rehabilitation Services Commission

Schooley Caldwell Associates, Inc. personnel who contributed to this project include:

Robert D. Loversidge, Jr., AIA, Principal-in-Charge
Laura V. Shinn, AIA, Project Architect, research, text, illustrations and photography
Alan F. Seaman, Landscape Architect, research, text, illustrations and photography
Genie S. Morgan, Publications Coordinator, editing, design and layout
Timothy J. Shepperd, Computer Systems Manager, CADD, graphics, and systems interface

PREFACE

The Governor's Council on People with Disabilities is composed of twenty-one members appointed by the governor for three-year terms. In its capacity as an advisor to the governor and to the General Assembly, the Council is constantly promoting the elimination of architectural barriers for people with disabilities.

The passage of the Americans with Disabilities Act has made it increasingly apparent that the attitudes about people with disabilities are greatly influenced by the architecture and the built environmentthat society erects.

Access for All is intended to provide guidance to those interested in eliminating the attitudinal and architectural barriers that have for too long kept people with disabilities from being productive, contributing members of society.

It is the hope of the Council that this book will truly promote and enhance access for all!

KARLA LORTZ
Executive Secretary
Governor's Council on People with Disabilities

February 1994
Columbus, Ohio

INTRODUCTION

The primary purpose of this book is to increase awareness of the accessibility problems faced on a daily basis by hundreds of thousands of Americans. The text and illustrations are aimed at architects, landscape architects, developers, property managers, planners, engineers, builders, etc. — the people who are responsible for building our physical environment — as well as professionals and lay people involved or who are interested in the full integration of people with disabilities into society.

In August of 1977, when *Access for All* was first published, we were all struggling to understand the concepts of accessible environments. Considerable research and design efforts have taken place since then, and now we have the Americans with Disabilities Act to enforce accessibility requirements. However, the built environment still often does not meet the challenge for independence. Inaccessible stores, offices, schools, transportation terminals, recreational areas, vehicles, parks and service facilities — this is only a "tip of the iceberg" list — abound everywhere. The time for designers and owners to take increased responsibility for achieving the goal of a barrier-free community is now.

This third edition of *Access for All* incorporates recommendations from the Americans with Disabilities Act and the Federal Fair Housing Amendments Act — recent Federal legislation codifying specific standards for accessible design. Other improvements include a totally new chapter on accessible housing, greatly expanded chapters on public facilities, renovation and rehabilitation, and thoughts on costs versus benefits. This last section documents the relatively low cost of accessibility and contains a discussion about the increased marketability of accessible facilities.

As people involved with the design and construction of our built environment become more aware of design criteria associated with barrier-free design, and as more and more people with disabilities are able to function independently within that environment, all of our lives will be enriched. Only then will we be able to declare that our society has *Access for All.*

ROBERT D. LOVERSIDGE, JR., AIA
Schooley Caldwell Associates
Architects Landscape Architects Engineers Planners

February 1994
Columbus, Ohio

The recommendations in *Access For* All are based on Title Ill of the Americans with Disabilities Act and its accompanying Architectural Guidelines (ADAAG), or the Federal Fair Housing Amendments Act of 1988 (FHAA), where appropriate. These guidelines are the most current and, in most cases, the most restrictive of the standards in common use today. Throughout the book, standards which meet ADA or FHAA's minimum guidelines are designated by words or phrases such as **must, minimum, required** and **should.** Recommendations beyond the ADA or FHAA minimums, but which are good practice when designing for people with disabilities, are designated by **may, preferred, recommended, if possible, whenever possible,** and similar wording.

Since the first edition of *Access for All was* published in 1977, the community of people with disabilities has adopted the use of "people first" language to improve public attitudes toward people with disabilities.

Every attempt has been made to use currently appropriate language and terminology throughout the third edition of *Access for All.* However, there are some exceptions to this rule, including the direct quotation of legislation or other material not written in people-first form, and the use of the acronym, "TDD."

TDD signifies "telecommunication device for the deaf." However, the terms TTY or text telephone are preferred by many people with hearing impairments. TDD is consistent with terminology used in many federal standards (including FHAA and ADA) and is widely used in technical specifications for telecommunication devices. TDD is used throughout this book to signify all telecommunication devices, including text telephones, for the sake of clarity and consistency only.

It is not the intention of this book to provide a substitute for thorough knowledge of the applicable legislation, regulations, and guidelines, nor to offer a legal interpretation of any of these laws. For architects and other professionals in the design and construction industries, this handbook should be used in conjunction with ADA or FHAA guidelines as well as any other federal, state or local accessibility regulations, codes, or standards which may apply. Building owners are advised to consult with their own architectural and legal counsel before finalizing plans for new construction, alteration or barrier removal.

The recommendations in this book are presented with no warranty, either expressed or implied. Neither Schooley Caldwell Associates or the Ohio Governor's Council on People with Disabilities, nor any officers, staff or advisors of either organization, assume any legal responsibility for the use of information contained in this book. Neither is liability assumed for the outcome of decisions, contracts, commitments or obligations made on the basis of this information.

Environmental Barriers

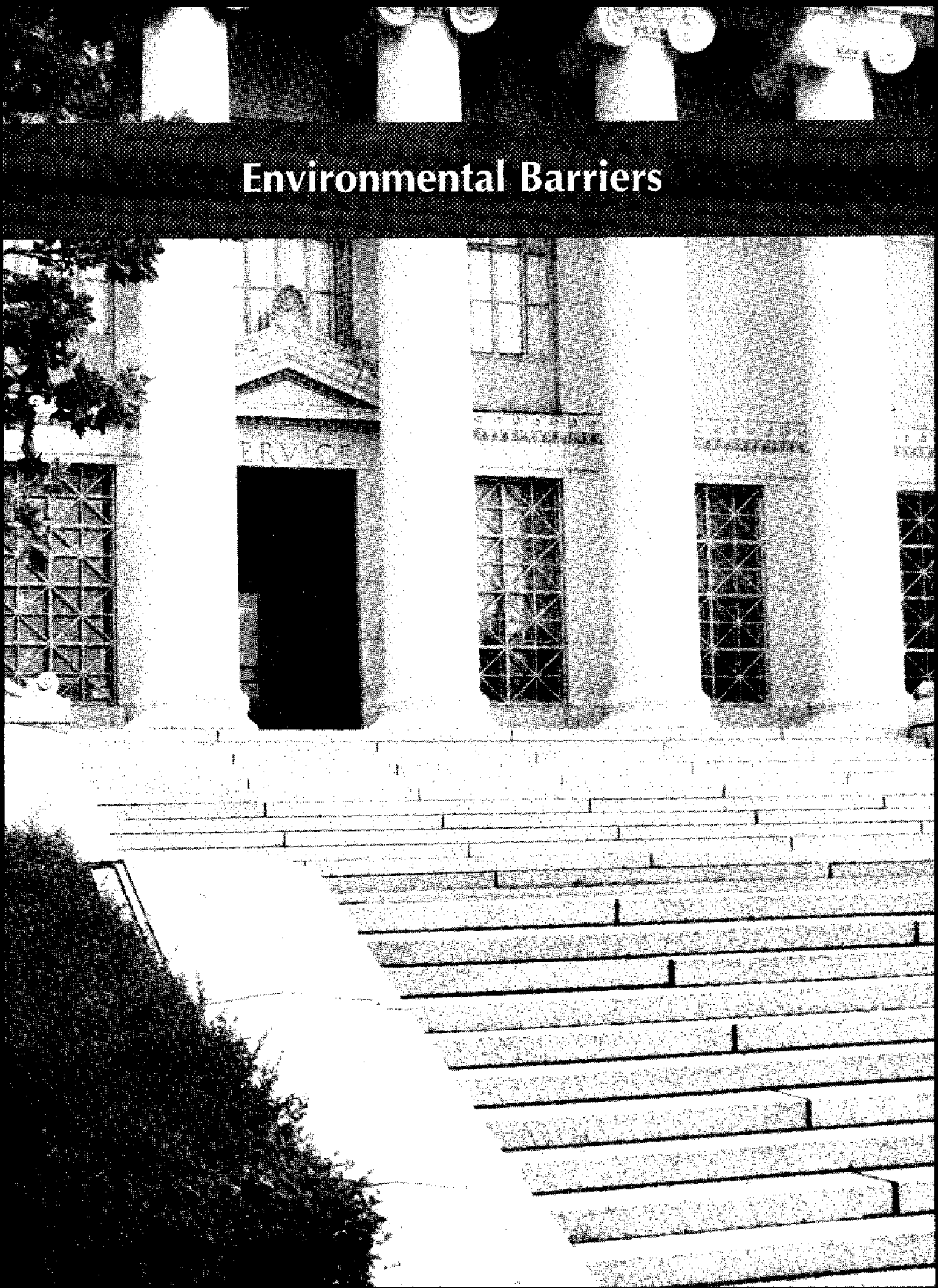

Environmental Barriers

Design and construction standards for the built environment have traditionally been formulated to meet the needs of the "average" person. However, nearly everyone will experience functional limitations at one time or another and consequently be restricted by barriers resulting from this design standardization. As children, individuals are first limited by "normal" design. Persons who have physical or functional impairments also encounter man-made barriers. Both are victims of *de facto* segregation in the environment. Even individuals who do not experience temporary or permanent disability cannot escape the decreasing abilities which occur during the normal course of aging. High curbs, steps and heavy doors readily remind the "not-so-average" that insensitive environmental design can be a barrier.

The National Institute on Disability and Rehabilitation Research indicates that at least 37.7 million Americans who are 15 years and over and non-institutionalized have at least one physical functional limitation and would benefit from a more accessible environment. This means that physical barriers limit the activities of more than one out of every five Americans'.

Independence for all persons and the integration of persons with disabilities into the mainstream of society are the goals of barrier-free design. The photographs and comments in this chapter highlight some of the common architectural barriers encountered on a daily basis by people with disabilities.

Redesign of products and attention to functional design would eliminate many of these problems not only for persons with disabilities, but for all people. Inaccessible design prohibits the full enjoyment of the environment. Barrier-free design ensures safe and extensive use of the built environment.

Environmental Barriers

In many places today, the attitudes about barriers are changing. Some places are becoming more accessible; however, not every solution works to the advantage of all persons.

Richard Hansler

The stairway pictured above is the entrance to a home. Should a person with a disability be denied access to housing? Architectural barriers often seem insignificant to people without disabilities, but even a few steps can bar access to a person using a wheelchair.

Environmental Barriers

Courtesy of Ultratec

RIGHT: Many persons with communication impairments can use a TDD/TTY for typed messages to spoken English and spoken English to TDD/TTY-typed messages.

Simply by providing a properly-designed handrail, the architect has allowed this person with a disability to enter!

Environmental Barriers

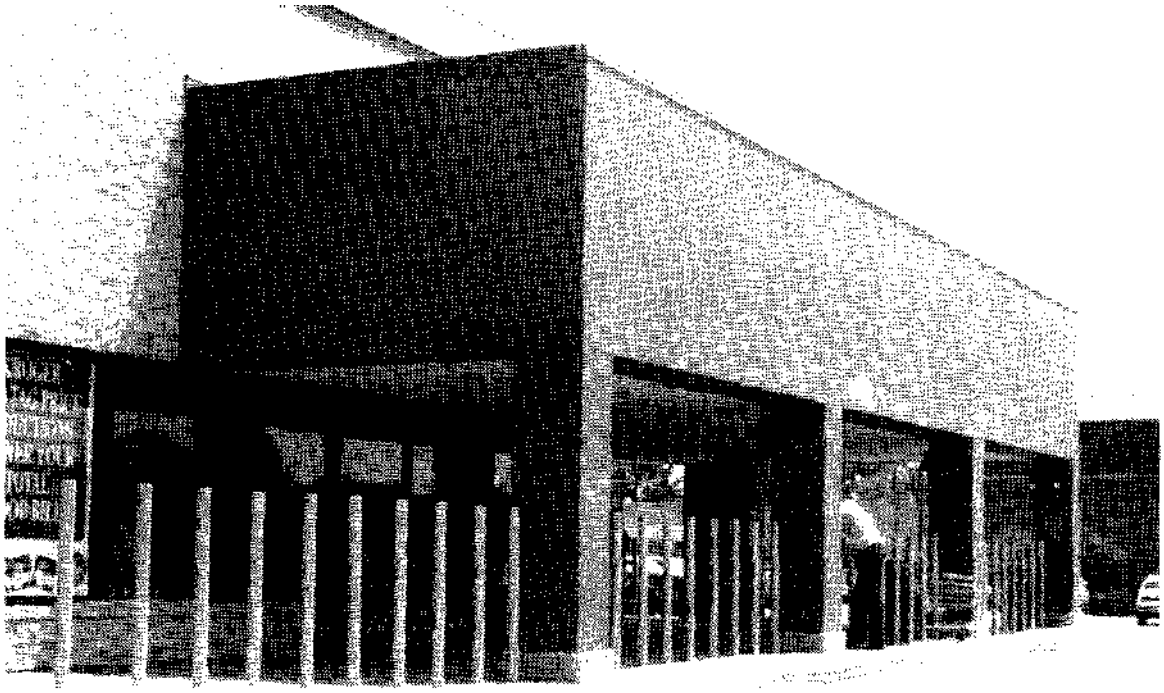

The steel posts in the picture above are intended to keep shopping carts in; they succeed in keeping people in wheelchairs out.

Open riser stairs may be aesthetically pleasing, but persons using crutches, with visual impairments, or with limited mobility as a result of the aging process may find them to be a hazard. Open risers are not permitted under the Americans with Disabilities Act.

Environmental Barriers

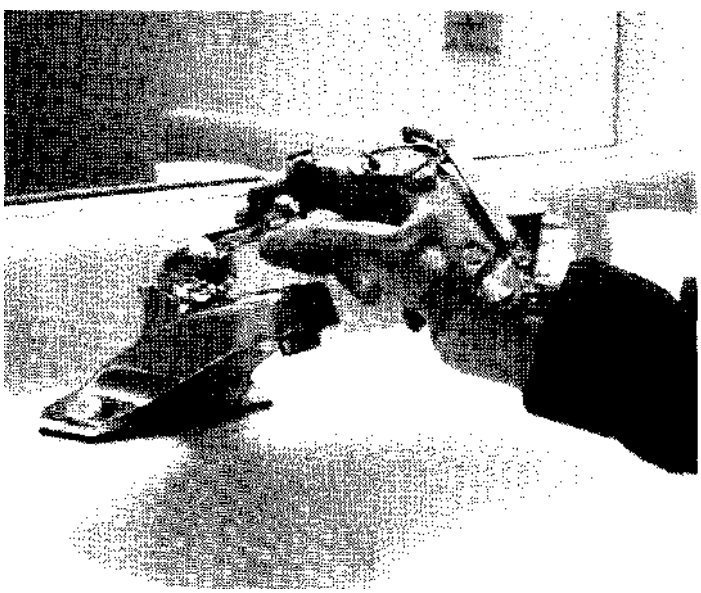

The removal of some barriers may require minor modifications.

The built environment often restricts the independence of persons whose mobility is limited as a result of the aging process.

The removal of other barriers requires only common sense and consideration.

Environmental Barriers

Courtesy of Easter Seal Society of Ohio

Environmental barriers affect all ages.

Courtesy of Easter Seal Society of Ohio

ENDNOTES

1. Lewis E. Kraus and Susan Stoddard, *Ph.D. Chartbook on Disability in the United States* (Washington, DC: National Institute on Disability and Rehabilitation Research, March 1989).

Who Benefits from a Barrier free Environmen t

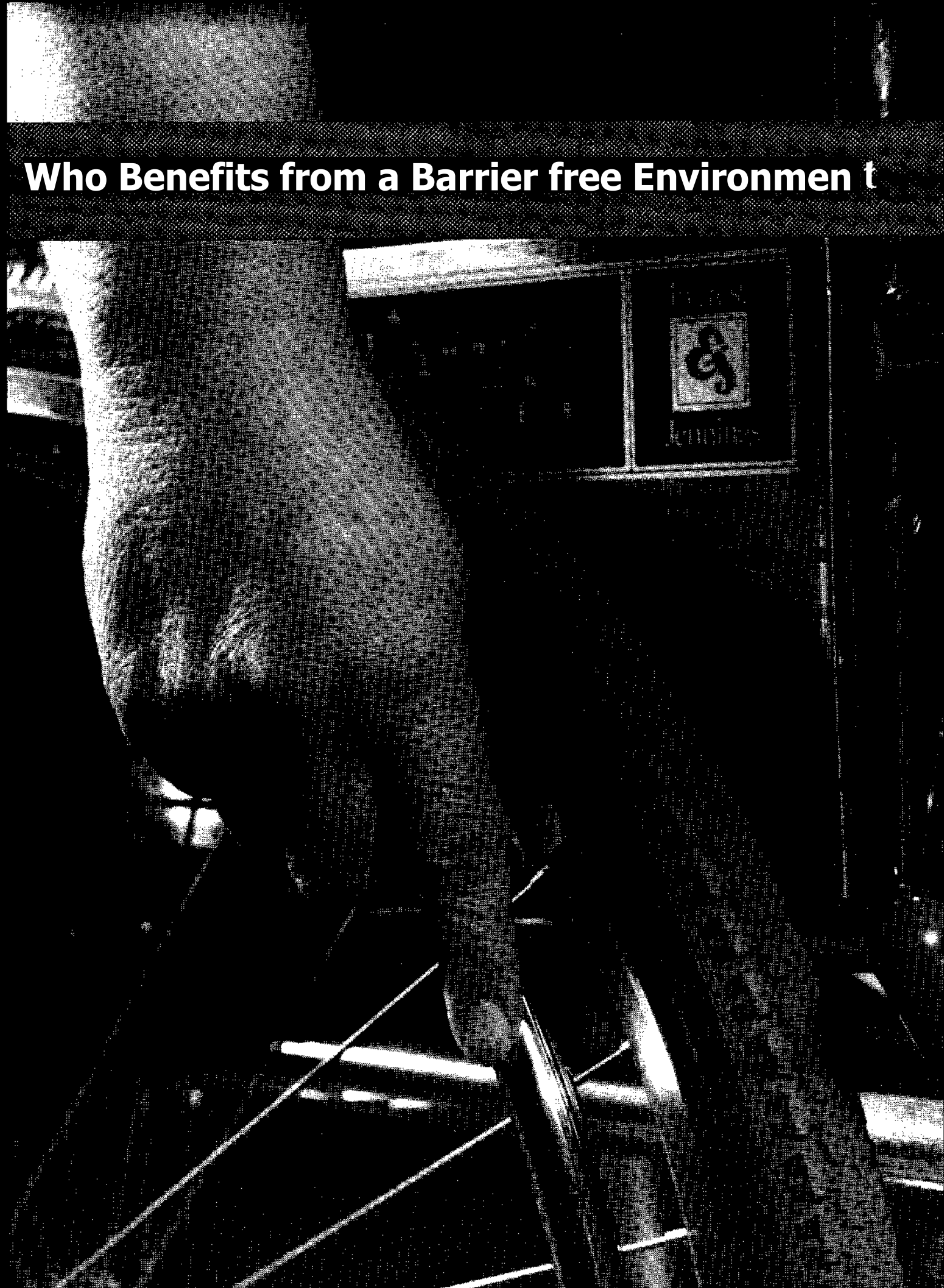

Who Benefits from a Barrier-free Environment

Everyone can benefit from a barrier-free environment. All of us will experience limitations on our physical capabilities at one time or another. Although many of us will manage to avoid temporary impairment due to illness or injury, it is unlikely that we will escape the inevitable process of aging. For people with permanent disabilities, functional limitations are a fact of every day life. A barrier-free environment which is beneficial for all is critical for people with disabilities.

People with disabilities are as varied a group as the general population. The types of functional limitations which each person experiences and the degree to which their capabilities are limited by disability varies widely. Even among people with the same apparent disability, there may be a wide range of abilities. An example would be two people using wheelchairs, both of whom would appear, at first glance, to have similar capabilities. One of these people might have tremendous upper body strength and mobility and may take great pride in wheeling about in a manual chair. The other person might have little or no arm strength and may prefer to use an electric wheelchair.

Whenever possible, a building should be designed for the specific abilities and functional limitations of all users in mind. In most cases building users are the general public, not an easily-defined group of people. Thus, it will not be possible to design with every potential user's specific limitations in mind. This is when the concept of universal design, or design which is useable by everyone regardless of age, size or ability becomes important. Universal design is barrier-free and provides an environment which responds to the needs of people who have a wide variety of abilities and disabilities.

Some Thoughts on Terminology

"Disability" refers to an impairment or reduction of an ability, either physical or mental, which can be described or diagnosed by a physician. In this book, the terms "impairment" and "disability" will be used interchangeably. The term "handicapped" has been used extensively in the past to describe people with disabilities. In reality, a "handicap" is something that hampers a person with a disability, a disadvantage or a barrier which is *imposed on that person by others.*

Barriers which can turn a disability into a handicap include negative attitudes towards people with disabilities as well as environmental features which prevent people from using buildings and functioning independently.

A person who is otherwise well-qualified for a particular job may be handicapped by an employer who is unwilling to hire people with disabilities. That same person can be handicapped by an inaccessible office.

A person who uses a wheelchair may be extremely handicapped by barriers such as high curbs, steps and narrow doorways which are found throughout our built environment. This same person may not be handicapped at all by an environment which has been designed and constructed without barriers.

Photo on the preceeding page by McGuire-Willis & Associates, Columbus, Ohio

Who Benefits from a Barrier-free Environment

People Who Are Aging

The aging process involves a series of changes which can gradually decrease a person's physical and mental abilities. Therefore, barrier-free design is extremely beneficial to people who are elderly. As we age, we will experience increasing limitations, known as "normal age changes," which can be accentuated by an inaccessible environment. Universal design concepts provide the flexibility necessary to accommodate normal age changes and the complex environmental needs which accompany them.

The aging process will affect every person in different ways at different times in their lives. Statisticians tend to define the elderly as people over the age of 65. In reality, the age at which people begin to experience the functional limitations associated with advanced age can vary from this statistical average by 30 years.

The process of aging does not automatically result in ill health, infirmity or disability. In the normal course of aging, those functional limitations that do occur tend to develop slowly. These gradual changes allow most people plenty of time to adjust their lifestyles and, to some extent, their environments.

For some people, the pace of normal aging is accelerated by disease, accidents or lack of proper health care. In such cases, individuals do not have time to adjust their environments to their changing needs and they may have great difficulty adapting to their surroundings. A comfortable home may suddenly become inaccessible if the person is required to use a wheelchair or if familiar paths of travel may suddenly seem alien and confusing due to a loss of vision or cognitive skills.

It should also be noted that older people who experience a rapid decrease in abilities may not remain disabled for the rest of their lives, but will often regain some of their former capabilities. The consistency and flexibility of universal design places the burden of adaptation on the environment rather than on people who are elderly and may not have the capability to adapt.

Courtesy of the Ohio Department of Aging

Who Benefits from a Barrier-free Environment

People with Functional Limitations

Current legislation and barrier-free design guidelines generally require universal access for people with a wide range of disabilities. A basic understanding of the functional limitations of people with various disabilities will increase the designer's sensitivity to environmental barriers beyond those covered in such guidelines. This chapter will provide an overview of several types of functional limitations which may be experienced by people with disabilities and people as they age. This categorization of limitations has been provided only as a means to organize information and is not intended as a categorization of people by their abilities or disabilities.

Limitations may be temporary or permanent, visible or invisible. A fractured leg is an example of a temporary, visible limitation. An amputation is a permanent, visible limitation. Deafness is a permanent, invisible limitation.

The are three major categories of functional limitations which may be experienced by people with disabilities or people who are aging: mobility, sensory and cognitive. People will experience limitations within each of these categories to varying degrees. The more severe a person's limitations are, the more beneficial a barrier-free environment will be.

The limitations outlined below are not mutually exclusive. People with multiple disabilities will often experience a variety of limitations with varying degrees of severity. It is not unusual for a person with cerebral palsy to have coordination limitations and therefore use a wheelchair. Elderly people are particularly likely to experience different degrees of multiple limitations such as decreased perception and cognition coupled with a loss of sensory input. Universal design concepts create an environment which accommodates people with a variety of limitations.

People with Mobility Limitations

People who experience mobility limitations have their range of movement restricted in some way and are most directly affected by physical barriers in the environment. The severity of these limitations can range from restricted activity because of reduced stamina to severe mobility limitations such as the loss of movement to all four limbs.

People who have lost the use of one or both of their hands will have difficulty twisting or gripping objects. The careful design of controls, hardware, handrails and grab bars is especially important to them. People with limited use of their arms will have difficulty reaching, twisting and grasping. They benefit from careful placement of controls within required reach ranges. People who experience limitations on the use of one or both legs may walk with insecurity or difficulty; proper stair design and flooring surfaces can be of great assistance to these people.

Who Benefits from a Barrier-free Environment

People with severe mobility limitations may not have use of entire body portions. Severe mobility limitations include paraplegia, or paralysis of the lower limbs, and quadriplegia, or paralysis of the lower limbs, as well as differing degrees of paralysis of upper extremities. Either type of paralysis may include loss of feeling in the limbs.

Severe mobility limitations may be reduced through the use of mechanical aids such as wheelchairs, but careful design of the built environment is the real key to turning limitations into possibilities. People who have severe mobility limitations can benefit from the use of wheelchairs only when the physical environment accommodates the use of those chairs.

Most of the elements of barrier-free design were developed to accommodate the needs of people using wheelchairs. Of special benefit are ramps, elevators, adequate maneuvering space and the placement of fixtures, controls and devices in useable locations.

Special types of mobility limitations include activity limitations, coordination limitations and reach limitations.

McGuire-Willis & Associates, Columbus, Ohio

People with Activity Limitations

People with activity limitations must curtail their normal activities due to a variety of conditions. There are three basic causes for activity limitations: reduced strength and stamina, a tendency to move more slowly, and slowed reaction time.

People with reduced strength and stamina may not be able to engage in strenuous work and sport or in unlimited physical activity. Even simple movements such as twisting a knob or pushing a door open may require more exertion than a person is capable of, and repetitive motions may be difficult to sustain.

People who have a tendency to move more slowly may have difficulty traversing great distances. Activities which require quick motion such as travelling through doors, entering an elevator or escalator, or boarding public transportation become extremely difficult.

People who have slowed reaction time have extreme difficulty operating machinery or controls and their slowed reactions may put them in great danger in the event of an emergency.

Activity limitations have a variety of causes. People who have diseases which involve stamina such as those of the heart or lung, or mobility diseases such as arthritis or rheumatism are often restricted in their activities. Activity limitations also increase with age or obesity. When mobility is hindered, strength may be significantly reduced since it can no longer be maintained through exercise. Slowed movements can be the result of stiffening joints or stooped posture resulting from age or illness.

Slowed reaction time may be the result of low energy levels caused by an illness, a loss of balance caused by inner ear damage, or a sedentary lifestyle. Vision and hearing loss, which limit the information one needs to move with speed and confidence through even a familiar environment, can also contribute to a slowed reaction time.

Both interior and exterior distances become extremely important considerations for people with activity impairments. The amount of force required to operate doors and controls is also critical. People with slowed movement or reaction times will benefit from adequate delays on door closers and elevators. Effective emergency notification and rescue assistance are crucial to the safety of a person with slowed reaction time.

Who Benefits from a Barrier-free Environment

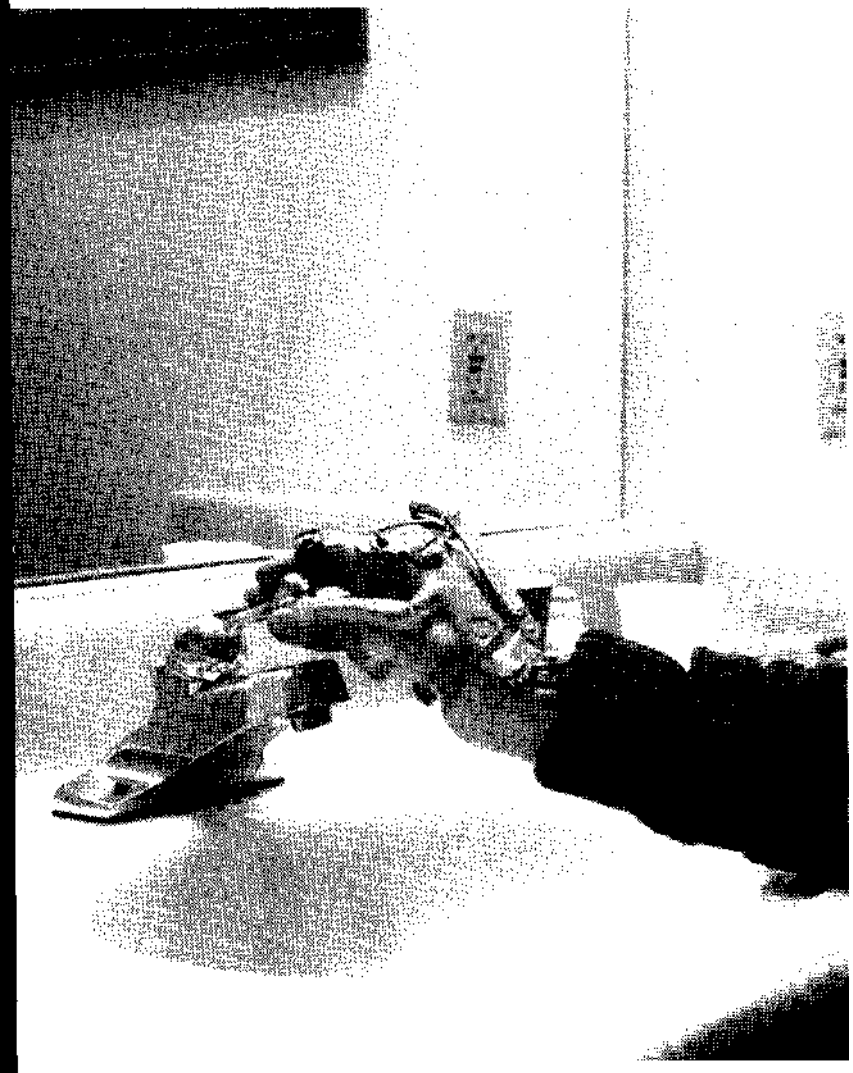

People with Coordination Limitations

People with coordination limitations lack muscle control to the limbs. This can make the twisting and grasping of hardware and controls extremely difficult. Activities which require a steady hand also become very challenging. Difficulties with coordination can also lead to an increased tendency to fall, which can be especially dangerous for elderly people.

Coordination problems may be caused by brain, spinal or peripheral nerve injury. Diseases such as cerebral palsy, muscular dystrophy and multiple sclerosis may also cause coordination limitations.

People with limited coordination benefit from controls, hardware and doors which are easy to operate. Handrails and grab bars which are properly located and configured will provide support and help prevent accidents. Properly designed steps, firm, stable floor surfaces, adequate level change markings, and sufficient lighting decrease the chance of falling and increase safety for everyone.

People with Reach Limitatic

Most people with mobility limitations of any severity have limitations on their range of reach. A person may have varying reach ranges, depending on which side of the body is being used or whether the person is seated or standing. People who experience stiffening or loss of dexterity in joints, whether due to injury or age, will also experience a decrease in reach. Deterioration of the nerves which control body movements will cause reach to be limited. People who are short in stature such as children, dwarfs or older persons may also have difficulty reaching items located for the use of "average" people. People using wheelchairs have very specific limitations on their high and low reach.

People who have reach limitations will benefit from the careful location of fixtures, controls and devices. The provision of adequate maneuvering space to allow close approach from a "best" side is also beneficial to people with reach restrictions.

Who Benefits from a Barrier-free Environment

People with Thermal and Tactile Sensitivity Limitations

Some people may experience a loss in tactile sensitivity. This loss of touch may also be accompanied by reduced sensitivity to pain and temperature. This can frequently lead to dangerous situations where there is the potential for contact with hazards such as hot water pipes and heating elements on stoves.

Proper location of and protection from such hazards is crucial to the safety of people with reduced thermal and tactile sensitivity. Controls should be located so that potential contact with hazards is minimized, and elements which may be extremely hot or cold should be insulated or protected for comfort as well as safety.

Even minor changes in ambient temperature may be difficult for people with disabilities and elderly people to tolerate. In most cases, this is due to a reduced ability to maintain body temperature, which can be caused by reduced activity levels, poor circulation or various illnesses.

Careful design of heating and cooling systems along with the placement of temperature controls in accessible locations will increase comfort for people who have trouble maintaining body temperature. The provision of elements such as garages which shelter or ease the transition from inside to outside is also quite beneficial.

McGuire-Willis & Associates, Columbus, Ohio

People with Sight Limitations

Almost everyone will experience limitations in their ability to see at some time in their lives. Very few people will maintain perfect visual acuity without corrective lenses. People who are aging may begin to experience a decline in vision as early as age 40. Sight limitations vary widely from partial to total loss of sight. Specific types of visual limitations include loss of visual field (peripheral vision), reduced color sensitivity and increased sensitivity to glare. Others may experience a decrease in their abilities to perceive detail, distinguish depth and adapt to changes in brightness.

Sight limitations can have a variety of causes, other than old age. Accidents or illness may result in reduced vision or blindness. Other conditions such as cataracts, glaucoma and detached retinas will cause varying degrees of reduced vision.

People with reduced visual acuity or total blindness will benefit from proper stair and floor surface design and detectable warnings at level changes. Audible or verbal alarms, warnings and signals are also beneficial to people with limited or no sight.

Who Benefits from a Barrier-free Environment

McGuire-Willis & Associates, Columbus, Ohio

People with Hearing Limitations

Hearing limitations can vary from slight hearing loss to total deafness. People with only partial hearing loss may still be able to detect major sounds such as loud noises. People with total hearing impairment are unable to hear any sounds at all. Some people, especially those who are aging, will experience a reduced ability to hear high frequency sounds such as those made by bells and emergency alarms. Others may experience a decline in hearing acuity, which reduces the ability to distinguish a voice or sound from competing background noise.

Accidents, illness and old age are the primary causes of hearing limitation or loss.

People with hearing limitations will benefit from the removal of communication barriers and from proper acoustic design which minimizes background noise. Supplementing audible or verbal instructions with written or visual ones will greatly assist people with limited or no hearing. The selection of a middle frequency range for all audible alarms and signals and the provision of equivalent visual notification is also critical for people with hearing impairments.

People who communicate by using lip reading and American Sign Language benefit from neutral backgrounds which do not visually distract from the communication which is taking place.

People with Cognitive Limitations

People with cognitive limitations may have less-than-average intellectual functioning. This group includes people whose cognitive limitations originated during their developmental period as well as those whose cognition and perception have been impaired later in life.

Cognitive limitations can be the result of illness, head injury, trauma or the aging process. As we age, certain mental changes may begin to limit our ability to respond to the environment. Changes in perception and cognition can have a depressing and even debilitating psychological effect on people who are aging.

The severity of cognitive limitations, like other limitations, can vary widely among people regardless of the origin or cause of these limitations. Some people may have what is considered average or above average intelligence, but require more time to process, store, summon and express information. This may be especially true of people who are aging. Others may experience difficulty in learning and have trouble applying learned concepts to everyday living situations beginning in childhood.

One characteristic shared to varying degrees by all people with cognitive limitations is difficulty in adaptive behavior. The ability to adapt to new environments requires a capacity to physically explore and mentally process information about that environment. If either ability is limited by physical or mental impairment then the ability to adapt will

be reduced. As a result, people who experience cognitive limitations often feel more secure in a more complex, familiar environment than in a simpler, but unfamiliar one.

Universal design concepts help create an environment which adapts to people rather than requiring people to adapt to the environment. People with cognitive limitations benefit from a simple, logical and familiar organization of facilities. Visual and audible cues to the layout of a building and the functions of its various elements will make a facility more accessible to people who have difficulty adapting to new environments. Such cues can include simple, graphic signage or color coding. Ease of operation and consistency in the design and location of fixtures will also help people with limited perceptual abilities operate more independently.

In some extreme cases, cognition and perception may be severely impaired by organic diseases such as Alzheimer's, and a person may begin to feel completely at odds with even the most familiar environments. The design of facilities for people with diseases as complex and unpredictable as Alzheimer's is beyond the scope of this book. However, the creation of an environment which is sensitive to the needs of people with cognitive limitations will be more accessible to all people including those in the early stages of serious cognitive diseases.

People with Temporary Limitations

Those of us who do not experience any of the limitations outlined above on a permanent basis may easily experience one or more of them temporarily. Temporary limitations are relatively short-lived and may be the result of an accident or other non-permanent condition. These limitations may require the use of mechanical aids.

A person with a fractured arm or leg will experience temporary mobility limitations such as difficulty walking or gripping. Persons carrying large or heavy loads will essentially have temporarily lost use of their arms. A person who is recovering from an operation may experience reduced strength and stamina. A pregnant woman may experience reduced stamina or difficulty with balance.

People with any of these temporary limitations will have a tendency to move more slowly and will benefit from an environment which allows plenty of time and space to perform daily tasks which have temporarily become more difficult.

Who Benefits from a Barrier-free Environment

McGuire-Willis & Associates, Ohio

People with Environmental Sensitivities

This is a subject of relatively recent concern, and is far too complex to be addressed thoroughly in this book. Some people experience sensitivities or allergies to certain substances used in construction and finish materials. Careful selection of these materials, avoiding known toxins and designing with up-to-date information on this subject, will help alleviate chemical and environmental sensitivities. Many individuals are extremely sensitive to smoke. Providing equivalent facilities for people with disabilities, such as areas of a restaurant or accessible hotel rooms, should include adequate non-smoking facilities. This is especially important for people who have respiratory complications due to their disability or who use a respirator. People with environmental sensitivities will also benefit from the proper design of mechanical systems which provide adequate fresh air and ventilation.

Who Benefits from a Barrier-free Environment

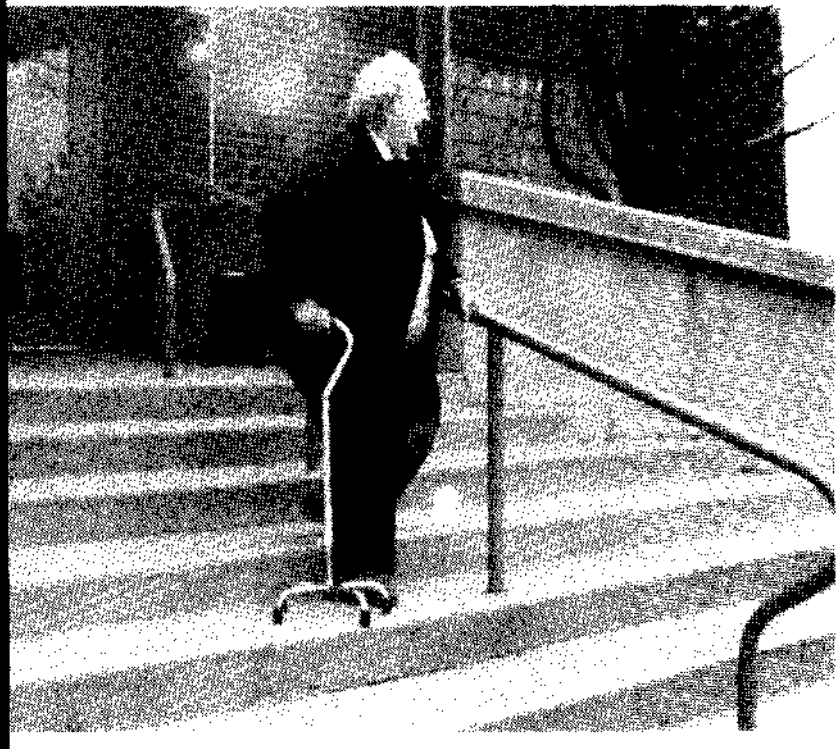

People Who Use Mobility Aids

Persons who have mobility limitations may be assisted in their movement by mechanical aids. These aids also enable people with mobility limitations to negotiate their environment with safety and greater independence. Mechanical aids include: crutches, support canes, walkers, braces, artificial limb/prosthetic devices, special shoes, long canes and wheelchairs.

People who use any of these mechanical aids benefit from adequate clear width or maneuvering space, stable, sl ip-resistant floor surfaces, and properly-designed rails or grab bars which can support their weight. People who use a support or long cane or wear a brace, artificial lower limb or special shoe also benefit from the proper design of steps and other level changes and other elements which could cause people to trip. People who use a long cane benefit from the careful placement or removal of protruding objects as well as the provision of detectable warnings at stairs or other potential hazards.

The wheelchair is the mobility aid which encounters the most barriers in the built environment. People in wheelchairs, especially those who use manual rather than motorized chairs, benefit from special attention to clear spaces, grades and sizes of openings.

Who Benefits from a Barrier-free Environment

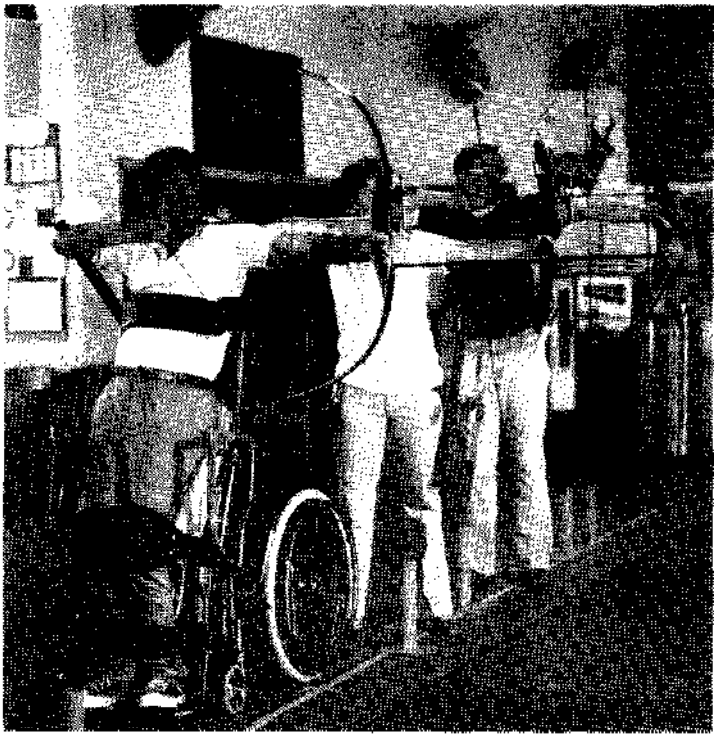

Courtesy of IMEX Healthcare, Inc.

Minimum space criteria set forth in this publication are largely geared to the needs of wheelchair users because they require the greatest user space of all the various mobility aids. Space allowances for wheelchairs will generally be adequate to accommodate people using most other types of aids, including walkers, crutches and dog guides.

The design of today's wheelchair has basically remained unchanged since it was developed over forty years ago. Although modifications and variations of the basic design exist, the majority of wheelchair users still select the standard tubular steel folding model. The motorized wheelchair is usually used by persons who are unable to propel the chair by its hand rims. Some research is being conducted into the redesign of wheelchairs and a few alternatives to the standard are available. New options include motorized "scooters" and a wheelchair which allows the user to stand.

Who Benefits from a Barrier-free Environment

Courtesy of Pilot Dogs, Inc.

People Who Use Communication Aids

People with hearing limitations may use a variety of communication aids including hearing aids, assistive listening devices and TDDs. The accommodation of such devices will require attention to the detailing of a building, primarily at the final stages of design. People who use communication aids will benefit from careful attention to acoustics, the location and accessibility of outlets for personal devices, and the installation of TDDs in phone booths.

People Who Use Other Aids

Many people with disabilities choose to enlist the assistance of a dog guide, canine companion or personal care assistant.

Although dog guides and canine companions are amazing animals, there are limits to the dogs' intelligence and intuition. These dogs are trained by consistent exposure to certain commands, situations and physical cues. Any significant change in the environment for which they are trained has the potential to confuse them, and should be considered carefully. An example is the curb ramp. Dog guides are trained to respond to the abrupt change in level at the traditional curb. This strong visual cue is removed when a curb ramp for people using wheelchairs is created, and the dog may wander into the street before he realizes that he should have stopped.

People who use canine assistants benefit from the identification of potential hazards with physical and detectable cues which are clear and consistent.

Personal care assistants, or human aides, are more flexible in responding to unfamiliar settings or unforeseen circumstances, but there are limits to their strength, stamina and patience. Most accessibility modifications which benefit people with disabilities will make the tasks of their helpers easier and minimize dependency in the relationship. As an example, a larger toilet stall accommodates a person in a wheelchair who needs assistance with toilet transfers as well as an assistant, at the same time maintaining privacy for both.

Population and Statistics

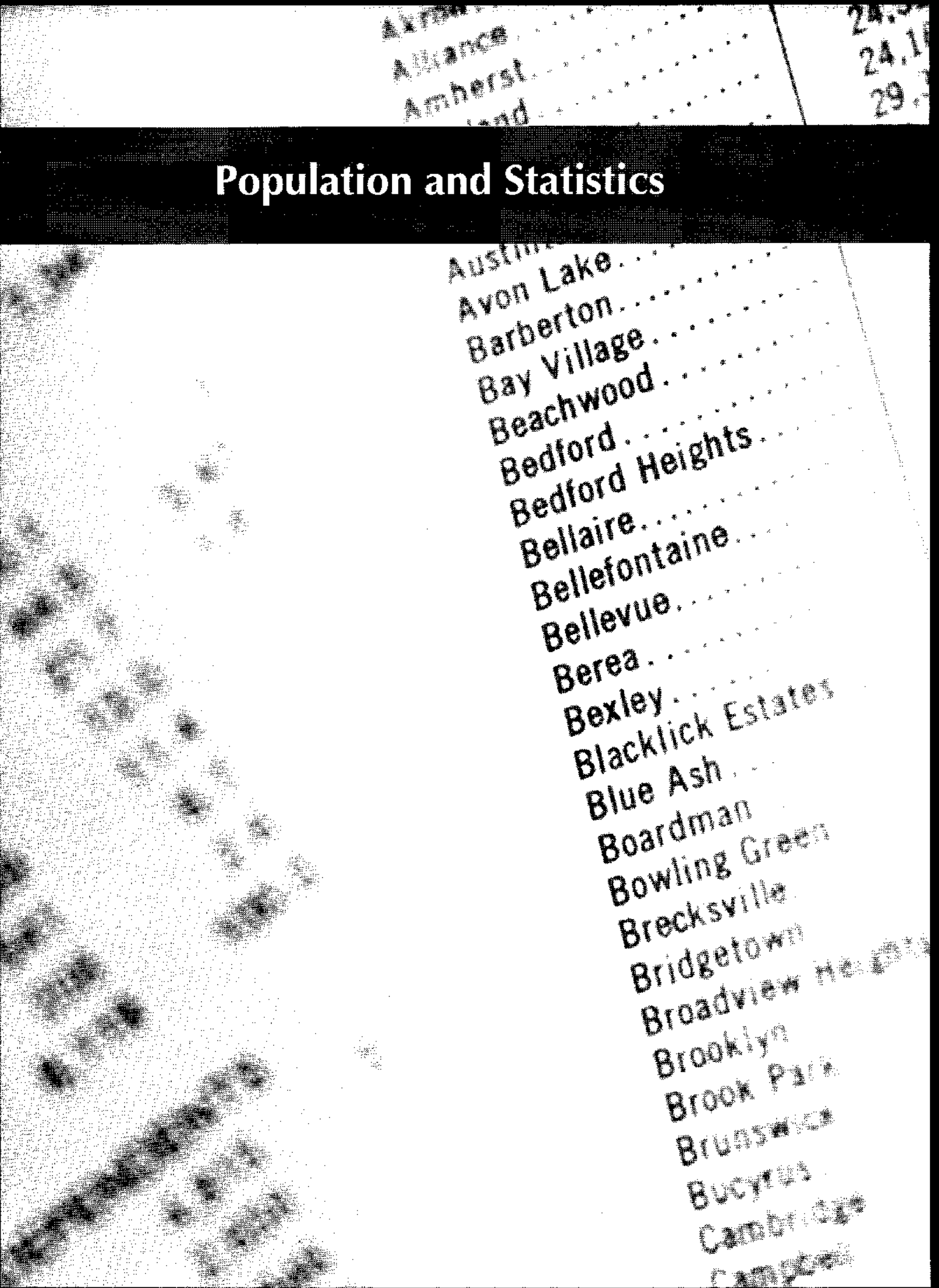

Population and Statistics

Researchers, legislators, manufacturers and the general public are becoming increasingly aware of the problems which people with disabilities face in the United States. Much of this heightened awareness is a direct result of publicity which the media has given to the many surveys and statistics on people who are elderly and people with disabilities in the country. Surveys have used differing definitions for disabilities, which has resulted in widely differing statistics. Most available statistics are outdated and do not include children who benefit from many access features, nor parents who often push their children around in strollers, people with temporary disabilities, or the families, friends and associates of persons with physical disabilities. At some point in time, virtually everyone will need a more accommodating environment.'

A discussion of statistics is included here to emphasize the high percentage of persons residing in our country and Ohio who are disabled and elderly. The environment should be built for *ALL* persons; the statistics, although conservative estimates, amplify the need for careful attention to design which includes an emphasis on access for all.

A large number of studies and surveys to determine the prevalence of disability in the United States have been conducted over the past ten years. The resulting estimates have varied widely, ranging from 30 million to over 40 million people.' A commonly-accepted figure places the current number of Americans with disabilities at 43 million. The origins of this estimate are uncertain, but it has become somewhat of a rallying cry for supporters of the Americans with Disabilities Act.

DISTRIBUTION OF ELDERLY POPULATION BY COUNTY

Source: Ohio Population and Housing Characteristics by Governmental Unit 1990. Prepared by Ohio Data Use Center, Ohio Department of Development, June 1991.

Top figure: number of people 65 and over

Bottom figure: percentage of county population 65 and over

Population and Statistics

It is difficult to present conclusive, current figures on persons with disabilities because of the variations in age groups studied as well as differing definitions of disabilities among these studies. A study conducted by the Bureau of the Census in 1986 estimated that the total number of people with a functional limitation was over 37 million, or approximately 21 percent of the population.

The disability rate increases by age as follows:[3]

5.2%	15-24 Years
7.5%	25-34 Years
13.4%	35-44 Years
23.0%	45-54 Years
34.2%	55-64 Years
58.5%	65 years and over

Data on the prevalence of disability in the United States has not yet been officially tabulated from the 1990 census figures. Some early estimates indicate that the total adult population (defined as between the ages of 17 and 64) of America is 154,751,243 and that an estimated 12.1 percent of these people have a disability.[4] This latter figure seems low, especially in light of the results of the 1986 study which estimated a 20.4 percent rate of disability among the 15-64 age group.

Until the 1990 census data is available to confirm or deny these statistics, the numbers presented in this chapter must necessarily remain conservative.

Between 17 and 21 million Americans are estimated to have some loss of hearing in one or both ears.

The 1990 U.S. Census has also indicated that there were 31,418,906 citizens age 65 and over in the United States. This represents approximately 12.5 percent of the population.[5] *A Profile of Older Americans: 1990* estimates that the elderly population will more than double by the year 2030.[6] Based on the 1986 study, it is safe to assume that at least 58 percent of this burgeoning elderly population will experience one or more functional limitations.

COMPARISON OF DISABLED and ELDERLY POPULATIONS[7]

Total Elderly (65 and older)	26,422,000
Total Disabled (ages 15-65)	37,304,000

But there are significant overlaps:

Total Elderly and Disabled (with no double counting)	48,311,000

This breaks down to three relevant, mutually exclusive classes:

Elderly	15,465,000
Non-elderly who are disabled	21,889,000
Elderly who are not disabled	10,957,000
TOTAL	48,311,000

Visual Impairments

A focus on two disability groups further emphasizes the number of persons who have a disablity.

Most people who are considered "blind" actually have some degree of vision. There are varying degrees of visual impairment including color-blindness, tunnel vision, lack of visual acuity and conditions requiring corrective lenses.

The 1986 U.S. Bureau of the Census study estimated that a total of 12.8 million Americans over the age of 15 experienced some form of visual impairment. This figure represented approximately 7 percent of the U.S. population at that time. Over 1-1/2 million people, or just less than 1 percent of that same age group were estimated to have severe visual impairments. Approximately 22 percent of Americans 64 and older were estimated to have some type of visual impairment, 4-1/2 percent of them severe.[8]

Population and Statistics

Hearing Impairments

Recent estimates of the number of people with hearing impairments vary considerably. A 1989 study by the National Center for Health Statistics estimated that 17 million Americans experience some hearing loss.[9] More recently, the American Speech/Language/Hearing Association (ASLHA) provided an estimate of 21 million Americans or 9 percent of the population with hearing impairments. If people with speech and language disorders are counted as well, the number jumps to 24 million or 10 percent of the population. The ASLHA further estimates that one out of three — or 33 percent—of Americans over 65 have hearing impairments.

Approximately one in every five Americans has a disability.

Projections into the future reveal that the number of people with hearing and speech impairments is growing as a direct result of the aging of our population. ASLHA estimates that this figure will increase at rates faster than population growth rates between 1980 and 2050. As more people move into the over 65 age group, limitations in speech and hearing will increase as a result of strokes, Alzheimers and other diseases as well as the process of "normal age changes."[10]

People with Disabilities - Ohio

The 1980 U.S. Census also revealed that states with the highest proportion of persons age 16 to 64 with work disabilities are concentrated in the southern United States. With a disability rate ranging from 9.9 to 12.7 percent, Arkansas, West Virginia, Mississippi, Kentucky, Oklahoma, Alabama, Georgia, Tennessee, Florida and Oregon, as well as the District of Columbia, had the highest percentage of working age persons with a disability. Statistics for Ohio reveal a total general population of 10,798,000 persons and a disabled population of 1,044,000 with a work disability. This is a state disability rate of 9.67 percent."

In 1981, the Ohio Rehabilitation Services Commission conducted an Individuals Occurrence And Needs Study through Project Ohioans. This state-wide telephone survey obtained updated statistics for estimating the number of disabled or functionally limited persons for each county in the state. The survey found that 40 percent of people with disabilities or functional limitations would consider themselves as severely disabled; that approximately 50,000 Ohioans use a wheelchair as their sole means of mobility or as a mobility aid; and that some 110,000 of the individuals with disabilities or functional limitations receive or need personal care assistance.[12]

Based on this survey, the estimated disabled population is 1,042,684. The deaf population is significantly underrepresented because of survey methodology. The disability types and prevalence rate across Ohio is depicted on the accompanying chart.[13]

People Who Are Elderly - Ohio

In 1980, a little over half (52 percent) of the persons aged 65 or older lived in the nine most populous states (California, New York, Florida, Pennsylvania, Texas, Illinois, Ohio, Michigan and New Jersey). Each of these states had at least one million older persons with California, New York and Florida each having more than two million. In 1989, one in every eight persons in the United States was 65 or older.

In Ohio the number of persons 65 and older has increased almost 25 percent between 1980 and 1989; 73.9 percent of the total population 65 and older live in metropolitan Cleveland, Columbus, Cincinnati, Toledo, Dayton and Akron.

Population and Statistics

OHIO ESTIMATES OF DISABILITY TYPES AS PRIMARY CONDITIONS AND TOTAL PREVALENCE

	Primary Conditions Estimates	Percent Distribution	Total Prevalence Primary & Secondary Conditions
Blind	23,828	2.28	26,897
Visually Impaired	73,956	7.08	107,167
Deaf*	7,417	0.71	8,196
Hard of Hearing	72,743	6.96	98,400
Arthritis and Rheumatism	164,183	15.72	209,660
Stroke	37,069	3.55	44,015
Spinal Cord	15,120	1.45	16,346
Accidents	122,872	11.76	150,117
Other Orthopedics	73,547	7.04	84,915
Amputations	20,368	1.95	24,265
Mental Illness	38,462	3.68	59,317
Personality & Character Disorder	5,918	0.57	6,307
Mental Retardation	38,181	3.66	38,964
Allergies	23,534	2.25	32,795
Diabetes	39,762	3.81	72,178
Epilepsy	10,083	0.97	12,666
Learning Disability	32,620	3.12	33,092
Cardiac	117,624	11.26	161,369
Hypertension	22,714	2.17	77,375
Respiratory	27,397	2.62	36,183
Digestive	10,293	0.99	25,844
Speech	9,192	0.88	14,760
Other Specified Disabilities	55,801	5.34	81,512
Unclassified	1,802	0.17	
TOTAL DISABLED POPULATION	1,044,486	100%	
TOTAL GENERAL POPULATION	10,797,630	100%	
SELECTED CHARACTERISTICS			
Severity			
Mild	248,365	23.8	
Moderate	375,138	35.9	
Severely Disabled	420,983	40.3	
Wheelchair	49,640	4.75	
Other Mobility Limitations	210,774	20.18	
Personal Care Assistance	110,465	10.58	

* The Deaf population is under represented (probably by at least 1/2) to the extent of availability of standard telephone service to households with deaf residents. There are plans for revising this estimate (see Limitations).

Source: Ohio Rehabilitation Services Commission, Project Ohioan, Executive Summary, June 1983, Prepared by James K. Rosseau.

ENDNOTES

1. Ruth Hall-Lusher, *The Construction Specifier, Designing for the Life Span* (February 1988).

2. U.S. Department of Justice, Civil Rights Division. *Preliminary Regulatory Impact Analysis of the Department of Justice - Proposed Regulation Implementing Title III of the Americans with Disabilities Act of 1990* (Washington, DC: February 14, 1991), page 13.

3. U.S. Department of Commerce, Bureau of the Census. *Disability, Functional Limitation and Health Insurance Coverage, 1984/85* (Washington, DC: 1986), page 4.

4. Population by Age and Sex Chart, "The Survey of Buying Power Demographics USA," *Sales and Marketing Management Magazine,* 1990 Census Edition (1991), pages 2-3.

5. Ibid.

6. U.S. Department of Health and Human Services, Program Resources Department. *A Profile of Older Americans: 1990.* Donald G. Fowles, AVA, in conjunction with the American Association of Retired Persons and the Administration of Aging, page 2.

7. U.S. Department of Transportation, Office of the Secretary and Office of Research and Development Policy. *Transportation and the Elderly and Handicapped, A Literature Capsule,* Transportation Center, Technology Sharing Program Office (1976), page 21. (Table updated with figures from endnote 3.)

8. U.S. Architectural & Transportation Barriers Compliance Board. *Regulatory Impact Analysis for Final ADA Accessibility Guidelines for Buildings and Facilities (draft),* (Washington, DC: October 10, 1991), pages 34-36.

9. *Preliminary Regulatory Impact Analysis,* op. cit.

10. *Regulatory Impact Analysis (draft) ,* op. cit., page 26.

11. Ohio Rehabilitation Services Commission, *Project Ohioans Executive Summary,* James K. Rousseau, research specialist (June 1983).

12. Ibid.

13. Ibid.

Photo courtesy of the Ohio Department of Aging.

Legislation and Regulations

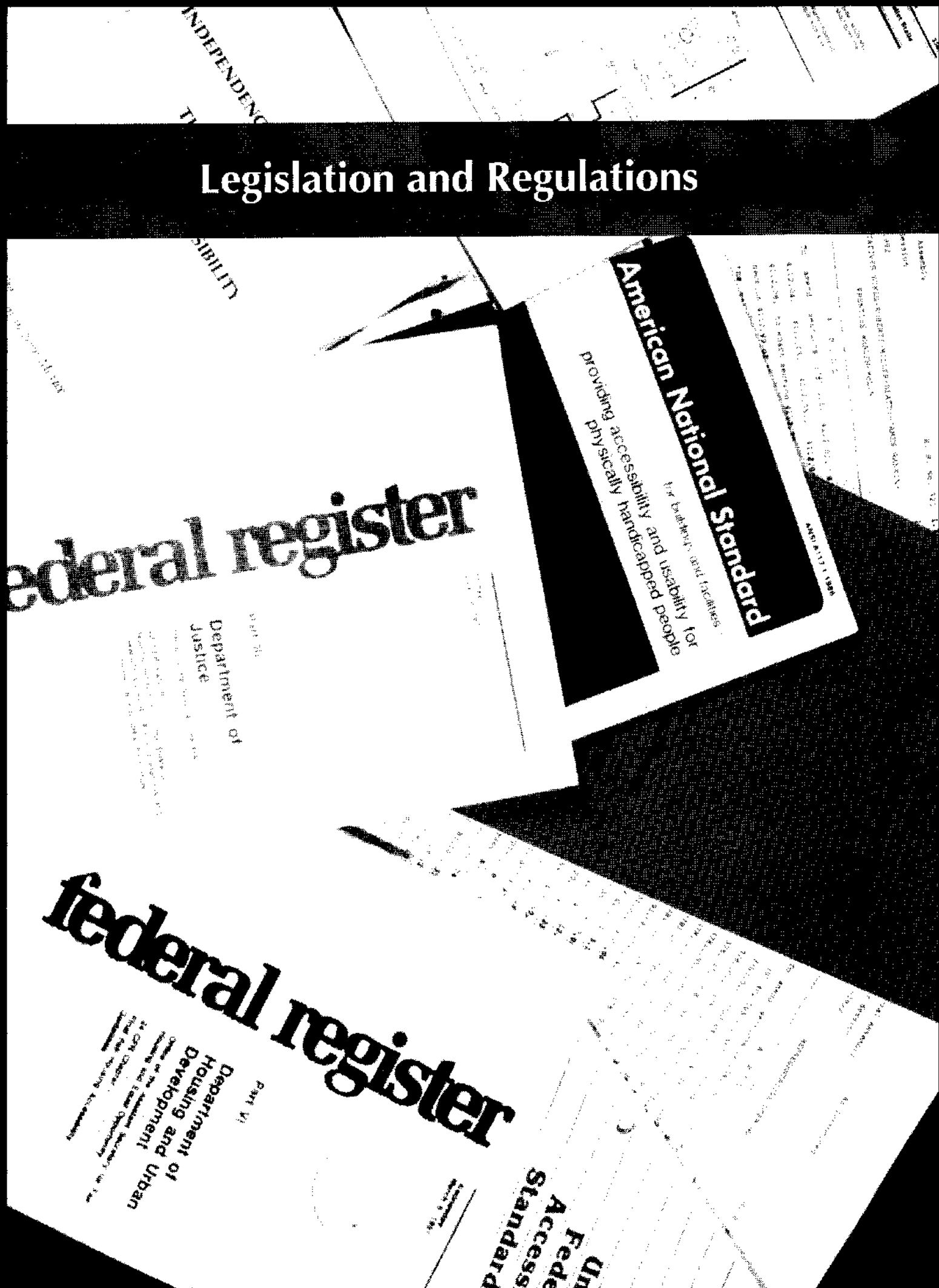

Legislation and Regulations

There are two basic methods by which the built environment may be made accessible: by voluntary actions and by governmental mandate. As designers and as members of society, we may have the best intentions to eliminate barriers, but we do not have a good track record of voluntarily creating an accessible environment. Our buildings and sites, which remain full of barriers even today, are testimony to this failure.

Legislating the quality and safety of the built environment has a fairly long history, but requirements that access for people with disabilities be provided are a relatively new phenomena. As life safety and building regulations began to be codified in the late 19th century, guidelines were based on "average" human dimensions without any consideration for physical limitations beyond those induced by panic situations. Only within the past 50 years have laws and regulations which provide legal requirements for an accessible environment been developed and enforced.

The latest and perhaps most significant piece of legislation providing legal requirements for an accessible environment, the Americans with Disabilities Act, was signed into law on July 26, 1990. This act is a comprehensive civil rights bill for people with disabilities. Many architects and building industry professionals were stunned by this new legislation and were confused when yet another set of accessibility guidelines was published to implement ADA on July 26, 1991. Most of these professionals felt their industries had come far in creating an accessible environment. People with disabilities, still faced with a largely inaccessible environment, viewed past attempts, both voluntary and legislated, as insufficient. Their successful efforts to convince lawmakers that stronger, more comprehensive legislation was required lead directly to the passage of ADA.

The primary focus of this chapter is current state and federal accessibility legislation and its impact on the design, construction and modification of the built environment. A chronological listing and brief description of significant early access legislation can be found in Appendix Ill which begins on page 243.

Legislation and Regulations

Federal Legislation

Accessible design began primarily as a voluntary effort and was limited to those buildings for which people with disabilities could afford a custom design and to buildings designed by a few far-sighted designers who concerned themselves with learning to create accessible structures. Most of the early legal requirements for a barrier-free environment were actually introduced within civil rights legislation.

The Architectural Barriers Act of 1968 was the first of many pieces of federal legislation which mandated equal access for people with disabilities. This act was passed in August of 1968, ***"to ensure that those buildings financed with federal funds are designed and constructed to be accessible to the handicapped."*** In subsequent years, several more U.S. laws which extended protection to areas such as housing and employment were passed for the protection of civil rights of people with disabilities (see Appendix III). The main focus of these regulations was architectural access, primarily to programs, activities and facilities which received federal funds.

The legal requirements for a barrier-free environment were first introduced within civil rights legislation.

Four different federal agencies were made responsible for establishing and enforcing standards for design, construction and alterations to various types of federal facilities. The Department of Defense established criteria for defense installations, the Department of Housing and Urban Development for residential structures, the U.S. Postal Service for post offices, and the General Services Administration for all other government buildings. The lack of consistent written guidelines among these various agencies made enforcing early federal legislation a serious problem.

Matters were further complicated when the Architectural and Transportation Barriers Compliance Board (ATBCB) was established in 1978. This board was charged with developing minimum guidelines and standards for the four agencies. Faced with essentially four different sets of standards, the ATBCB and the four federal agencies agreed to develop one set of uniform standards. The result of these efforts was finally published in 1984 as the Uniform Federal Accessibility Standards (UFAS). These guidelines, in their updated form, remain the standard for all federal construction today.

State Legislation

Some states and local jurisdictions began to develop accessibility requirements about the time that federal civil rights legislation was evolving. Some jurisdictions placed these regulations in the civil rights arena, others incorporated them directly into building codes. Many states initially avoided imposing barrier-free requirements since they could not correlate them with an obvious life safety, health or public welfare risk. Where local regulations were developed, they varied significantly in scope, technical specification, and enforcement. Currently most states have legislation protecting the civil rights of people with disabilities as well as some form of barrier-free construction requirements. The scope and content of these regulations, however, continues to vary widely.

Ohio Legislation

The first Ohio statute to require access to buildings for people with disabilities was Section 3781.111 of the Ohio Revised Code, which became effective in 1975. The first version of this law mandated access only to public buildings, that is, buildings owned by the state or any political subdivision which were open to and used by the public.

Senate Bill 162, passed in July 1976, amended several sections of the Ohio Revised Code to extend the protection of civil rights to people with disabilities. Section 4112.02 was revised to prohibit employment discrimination against someone on the basis of a "handicap." Other sections of the revised code were added or rewritten to ensure that an adequate number

Legislation and Regulations

of accessible units be provided in housing projects which were funded by the Ohio Development Board. This section has since been repealed and replaced by Section 175.13, which is outlined in Appendix I.

One particular section of Senate Bill 162 was ahead of its time and anticipated the provisions which were to be set forth in the Americans With Disabilities Act. This section mandated equal access to public accommodations such as inns, restaurants, theaters, stores and amusement sites, ensuring the full enjoyment of the accommodation" for people with disabilities.

A more detailed explanation of these early access laws can be found in Appendix III.

The current form of Section 3871.111 of the Ohio Revised Code requires the Board of Building Standards to adopt accessibility standards and extends the scope of those standards to include all buildings subjectto the Ohio Basic Building Code (OBBC), not just public (state or local government-owned) buildings. The current version of Section 3871.111 is reprinted in Appendix I.

OBBC accessibility requirements apply to all buildings which are open to the general public.

Building Codes and Accessibility

Building construction is regulated by codes and ordinances designed to protect the health and safety of building occupants and the general public. These codes generally set minimum standards for design, construction and maintenance of new buildings as well as structures undergoing major rehabilitation (repairs and alterations).

Several national or "model codes" have been developed to cover common building design and construction situations. Most states have adopted one of these model codes and made refinements which address local variations in construction type or practice. Plans for all buildings to be constructed within that state are submitted to local code officials to be reviewed for compliance with the building code. Most states created their own accessibility provisions or referenced a national standard such as ANSI 117.1. Scoping provisions, the specific requirements for minimum numbers of accessible elements, were not included in ANSI or in model building codes. Thus, many decisions concerning the application of barrier-free standards were left up to individual states. As a result, the level of accessibility continued to vary widely between states.

In Ohio, the Board of Building Standards is responsible for writing and revising the OBBC, which is based on the BOCA model code. It also has responsibility for adopting standards, rules and regulations to facilitate reasonable accessibility as mandated in Section 3781.111 of the Ohio Revised Code.

As early as 1967, the OBBC contained requirements for accessible elements in buildings. The code referenced "Specifications for Making Buildings and Facilities Accessible to and Usable by the Physically Handicapped" of the American National Standards Institute A117.1-1961 as the appropriate standard. Additional provisions relating to specific access elements were also part of this section of the 1967 OBBC. The OBBC also contained minimal scoping provisions. However, these requirements applied only to public buildings.

Between 1967 and 1993, the OBBC accessibility requirements were expanded to apply to all buildings or parts of buildings which were open to the general public. Fairly detailed requirements were provided for numbers of accessible elements such as parking spaces, telephones, toilet rooms and showers. ANSI Al 17.1 was referenced as the technical specification, and the code was updated to reference the 1980 and 1986 revisions of ANSI.

Legislation and Regulations

The Impact of Legislation

Early federal access regulations were fairly comprehensive for their time, but they were not enforceable at the local plan review stage because local code officials had no authority to enforce federal regulations. Early state regulations were also hard to enforce until the state building codes developed or adopted technical specifications. Even when access requirements became a part of all state building codes, these provisions were often the last to be enforced because most code officials did not believe that access issues had a direct effect on life safety or public welfare. As a result, many of these early laws and regulations were enforced only after complaints were filed with state or federal civil rights commissions.

FHAA and its guidelines do not supersede any state legislation which requires a higher level of access.

Unfortunately, enforcement after the fact has proven to be seriously inadequate when applied to the built environment. Once a facility is constructed, the complexity and costs associated with correcting areas of noncompliance often render the necessary alterations impractical.

The result of many years of conflicting access guidelines, inconsistency among different levels of government, and outright noncompliance is evident as we survey the built environment today. Our sites and buildings are certainly more accessible than they were thirty years ago, but this is due primarily to voluntary efforts by a small number of progressive designers and owners, and vigilance by a few far-sighted enforcement officials. Despite this, an appallingly large portion of our environment still remains inaccessible.

Since the mid 1980s, people with disabilities and their advocates have become increasingly frustrated by this situation, and rightly so. As the environment has slowly become more accessible, and as more positive attitudes towards people with disabilities have evolved, more people with disabilities have been willing and able to actively participate in society. In addition, advances in medical technology and improvements in mechanical devices have enabled people with more severe physical limitations to become mobile. These new participants have quickly discovered barriers which had not been covered in previous design guidelines. As their frustration grew, this new minority began to demand stronger protection of their civil rights, and in the late 1980s they effected two major changes in U.S. law.

Current Federal Legislation

Federal Fair Housing Amendments Act

The Fair Housing Amendments Act (FHAA) of 1988, Title VII of the Civil Rights Act of 1968, amends the earlier act by adding familial status (people with children) and people with disabilities to the protected classes. Under the provisions of the act, regulations were established to ensure that people with disabilities were given equal access to appropriate housing.

The FHAA prohibits housing discrimination based on a person's physical disabilities, which includes discrimination caused by inappropriate design. This act is applicable to all public and private multi-family projects with four or more dwelling units under a single roof. Where elevators are provided, all units are subject to FHAA; otherwise, only ground floor units are covered. Compliance with this act is required for buildings that received their final building permit after January 13, 1990, or were first occupied on or before March 13, 1991.

Legislation and Regulations

The FHAA Accessibility Guidelines were published in the *Federal Register* on March 6, 1991. These guidelines are not mandatory, but are intended to provide a "safe harbor" for compliance with FHAA.[1] The guidelines recommend that dwelling units in projects requiring compliance with FHAA be adaptable for accessibility throughout, and public areas serving such dwelling units be fully accessible. Major provisions of these guidelines are outlined in the chapter, "Housing," beginning on page 126.

FHAA and its guidelines do not supersede any state legislation which requires a higher level of access. In some cases it may be difficult to determine which law is more restrictive, depending on how "level of access" is defined. Using Ohio law as an example, Section 175.13 of the Ohio Revised Code requires that projects of more than ten units which receive any funding from the Ohio Housing Finance Agency must make at least five percent (but not less than one) of the units fully accessible. In most cases, FHAA would require a larger number of units to be adaptable, but not necessarily accessible. In Ohio, both laws would be applicable. Thus, all units required to be adaptable by FHAA should be made adaptable in housing projects covered by that federal law, and five percent of those should be made fully accessible in those projects covered by Section 175.13.

Title I prohibits discrim ination against an otherwise qua lified employee on the basis of a disability.

Americans With Disabilities Act, (ADA), Public Law 101-336

"The ADA...enables society to benefit from the wisdom, energy, and industry of people who want just one thing - a fair chance."
President George Bush

For over 43 million citizens with disabilities, the Americans with Disabilities Act represents an unprecedented opportunity to eliminate the barriers to independence and productivity. The ADA is modeled after the Civil Rights Act and Title V of the Rehabilitation Act of 1973. The bill was originally drafted by the National Council on Disabilities and is supported by every major disability organization and constituency group. President Bush signed the ADA into law on July 26, 1990.

The purpose of the ADA is to extend and strengthen the civil rights of people with disabilities. The Americans with Disabilities Act (ADA) consists of five titles which cover four basic areas of civil rights. Title I prohibits employers from discriminating against individuals with disabilities in hiring and promotion practices. Title II offers similar protection in matters involving state and local governments and mandates that all government facilities and services, including transportation, be accessible. Title III requires that all public facilities operated by private entities be accessible to people with disabilities. Title IV requires public telephone companies to provide relay services for people who use telecommunication devices for the deaf (TDDs). Title V contains miscellaneous provisions regarding administrative matters such as the development and enforcement of regulations and the relationship of ADA to other laws. Titles 1,11 and III will be discussed in more detail below. Titles IV and V will not be addressed further.

Title I

Title I affects employers of 25 or more employees. As of July 26, 1994, it will also affect employers of 15 or more employees. Title I prohibits discrimination against an otherwise qualified employee on the basis of a disability. Employers are required to make "reasonable accommodations" of the needs of employees with disabilities. These accommodations will most likely consist of job restructuring and modification of

equipment, but may also include modifications to the building itself to ensure physical access to the place of employment. It is also important that architects design new work places to be as accessible as possible. Work site and equipment modifications are useless if people with disabilities cannot enter buildings and access necessary facilities.

Title II

As of January 26, 1992, Title II requires that state or local government entities provide access for people with disabilities to all of the goods, services and activities which they offer. Architectural changes do not necessarily have to be made to existing facilities if services can be provided through another means. Public entities had until January 26, 1993 to evaluate their current programs for accessibility and devise a plan to correct any inadequacies.[2] If structural modifications are required to an existing government building, these should be completed as expediently as possible, but must be made by January 26, 1995.[3]

Title 11 re quires that all goods, services and a ctivities offered by state and local e ntities be accessible to people with disabilities.

Under Title II, all new construction or alterations (for purposes other than providing access to goods and services) of publicly-owned or leased buildings must be done in accordance with the architectural guidelines provided in Title III of ADA (ADAAG) or UFAS.[4]

Title Ill

As of January 26, 1992, Title **III** requires that all places of public accommodation and commercial facilities be made accessible to people with disabilities. The ADA Accessibility Guidelines (ADAAG) are contained in Title III, and these standards affect the majority of the private sector.

Legislation and Regulations

Definitions

Title III begins by explaining the distinction between public accommodations and 'commercial facilities. Public accommodations are defined as private facilities whose operations affect commerce. Public accommodations must fall within one of the following 12 categories:

- Place of lodging, such as an inn, hotel or motel.
- Establishment serving food or drink, such as a restaurant, coffee shop or bar.
- Place of exhibition or entertainment, such as a movie house or theater.
- Place of public gathering, such as an auditorium, a lecture hall or a convention center.
- Sales or rental establishment, such as a bakery, grocery store or clothing store.
- Service establishment, such as a dry cleaner, bank, barber shop, beauty shop, travel agency, shoe repair service, office of an accountant or lawyer or professional office of a health-care provider.
- Station used for public transportation.
- Place of public display or collection, such as a museum, library or gallery.
- Place of recreation, such as a park, zoo or amusement park.
- Place of education, such as a nursery school, elementary or secondary school, undergraduate or post-graduate private school.
- Social service center establishment, such as a day-care center, senior citizen center or food bank.
- Place of exercise or recreation, such as a gymnasium or health spa.

Commercial facilities are defined as places intended for use by a private business and its employees. Examples of commercial facilities include office buildings, warehouses, factories, and other buildings where employment may occur.[5]

Legislation and Regulations

The Goals of Title Ill

The two basic goals of Title III of ADA are to avoid the denial of participation and to create intetrated settings. These two concepts are central to understanding many of the requirements contained in Title III. Title III prohibits public accommodations from denying people with disabilities "the opportunity to participate in or benefit from goods, services, facilities, privileges, advantages, or accommodations" offered by that entity. Title III further requires that the public accommodation offer those "goods, services, facilities, privileges, advantages, or accommodations" to people with disabilities "in the most integrated setting appropriate to the needs" of those individuals.[6] Three basic requirements of Title III are the provision of auxiliary aids for people with hearing, vision, or speech impairments; the removal of barriers in existing facilities; and the new construction or alteration of facilities in accordance with the ADAAG. These three requirements are intended to ensure that the goals stated above are fulfilled.

Title Ill requires that all places of public accommodation and commercial facilities be made accessible to people with disabilities.

Barrier Removal

Owners of existing buildings which contain a place of public accommodation are responsible for removing architectural and communication barriers, provided that such removal is "readily achievable." If the actual removal of barriers is not "readily achievable," the public accommodation must provide alternative methods of making their goods, services, facilities, privileges and advantages accessible to people with disabilities.

The definition of "readily achievable" which is provided by ADA is a rather vaguely worded: "easily accomplishable and able to be carried out without much difficulty or expense."' More concrete factors which should be considered in determining what is "readily achievable" include the nature and cost of the barrier removal or alternative method, as well as the size and financial resources of the public accommodation.[8] ADA also provides a list of priorities for barrier removal, which is summarized in the chapter, "Renovation and Rehabilitation," beginning on page 200.

It is important for designers to be aware that the responsibility for deciding what is readily achievable must rest with the owner of the facility. Architects can and should be involved in compliance surveys, conceptual designs and cost estimates, but ultimately the owner must decide which barriers to remove and when alternative methods should be employed.

Places of public accommodation have not been given a timetable for barrier removal such as that which is provided for government agencies under Title II. Barrier removal is intended to be an ongoing process with periodic reviews and continuous allocation of funds as available.[9] The ultimate goal is that, over time, most of the physical barriers will be removed.

Auxiliary Aids

Places of public accommodation, both new and existing, must provide auxiliary aids and services to ensure effective communication for people with hearing, vision or speech impairments. These aids and services can include interpreters, assistive listening devices, written materials, audiotaped texts, and braille or large-print materials. Most of these auxiliary aids will not require major architectural consideration or changes, but may affect the planning and layout of electrical wiring, devices and furnishings.

The requirements for barrier removal and auxiliary aids and services do not apply to commercial facilities or areas of public accommodation which are used only by employees as work areas. However, employers must provide "reasonable accommodation" under Title I for employees with disabilities to enter and use the facility.

New Construction and the ADAAG

ADA requires that new construction and alteration of places of public accommodation be accessible to people with a variety of disabilities. If alterations commence after January 26, 1992, or new construction is occupied after January 26, 1993, work must comply with the ADAAG.

The ADAAG begins with a series of scoping provisions. Such provisions are included for new construction of sites, exterior facilities, and buildings as well as additions, alterations, and historic preservation of existing facilities.

Following these scoping provisions, a series of technical guidelines cover major elements of a building. These are similar in form and content to ANSI and UFAS, with significant differences *highlighted by italics.* Following the technical guidelines are a series of additional requirements for special building types including restaurants and cafeterias, medical care facilities, business and mercantile facilities, libraries, accessible transient lodging, transporation facilities and other supplemental guidelines as they are published periodically.

Always strive for the solution which allows the fullest participation in the most integrated setting for people with disabilities.

Implementation and Enforcement

Both ADA and FHAA are non-discrimination legislation, and as such, are enforceable primarily after the fact. Both laws will be enforced through complaints and private lawsuits. In the case of FHAA, complaints would be made through the Department of Housing and Urban Development; in the case of ADA, the U.S. Department of Justice or the Equal Employment Opportunity Commission are the primary enforcement agencies.

Placing enforcement on the backside of an issue creates several problems for designers, builders and owners who are used to working within the familiar process of state plan approval. Even if states adopt the ADAAG into their building codes, there is no mechanism at the federal level for assurance of compliance with ADA or FHAA before a project is built or altered.

Another problem for owners, design professionals and the construction industry is that no set of guidelines can cover all possible access issues. Even if a building is constructed in complete compliance with FHAA or the ADAAG, there may be instances where a person with a severe disability cannot access a facility. Under ADA and FHAA, the person who is denied access can still file a complaint or bring a lawsuit against the owner, if the owner refuses to take additional reasonable measures to provide the individual access to goods or services. Although the primary responsibility for compliance lies with the owner, others such as architects, designers, builders and construction companies may also be named in such suits.

Finally, there is the problem of conflict between guidelines. Many state building codes have created their own accessibility provisions or referenced ANSI 117.1. Both ADA and FHAA are non-exclusive and non-preemptive. Any federal, state, or local legislation which contains stricter requirements than FHAA/ADA will still apply, and neither FHAA or the ADAAG can preempt existing building codes except where those building codes are less restrictive than the federal legislation.

Most conflicts which occur between ADA and the local building code can be resolved by using the more restrictive requirement, that is, the one which is most beneficial to the widest range of people with disabilities. In most cases, the most restrictive guideline will belong to the ADAAG.

There are some additional steps which can be taken to help avoid or resolve accessibility conflicts, and still comply with the spirit of recent federal accessibility legislation. All of these measures should be employed in conjunction with a detailed study of all applicable regulations. None of the steps presented below is an adequate substitute for thorough knowledge of current standards of accessible design.

1. ***Always strive for the maximum accessibility for the widest variety of people.*** One of the major differences between ADAAG and the FHAA guidelines and earlier regulations is that both of these standards address the needs of people with a wider variety of disabilities.

Legislation and Regulations

2. ***Involve people with disabilities in the design process.*** If members of the community with a wide variety of abilities and disabilities are consulted early in the design process, there is less likelihood that a particular group of individuals with disabilities will be unable to access the facility once it is built. This will be especially important in situations where strict compliance with the standards is not feasible or where the requirements themselves may be questioned by people with a particular disability.[16]

3. ***Keep the goals of recent federal legislation in mind when designing.*** ADA's goals of avoiding denial of participation and creating the most integrated settings possible can be helpful guidelines when evaluating solutions to any access problem. Always ask "which solution allows the fullest participation in the most integrated setting?"

One of the directives of ADA is to mandate a minimum level of accessibility which will be uniform across the country.

Uniform Standards and Uniform Accessibility

One of the directives of the ADA is to mandate a minimal level of accessibility which will be uniform across the country. The goal is that a person with a disability will be able to access buildings in a similar manner all across the United States.

There is no question that everyone would benefit from uniform accessibility legislation and standards. Designers could concentrate on one set of guidelines and develop creative approaches to improving accessibility. Standardized accessible construction details would reduce overall building costs. These same uniform requirements would also enable manufacturers to standardize their "barrier-free" products; the resulting cost reductions and increased profits would encourage the development of more accessible goods. People with disabilities stand to benefit the most from uniform standards. A uniform level of accessibility ensures independence for all, but especially those who travel for work or pleasure.

The ADA appears to be the perfect vehicle to achieve this uniformity. As federal legislation, the law applies across the country to most new construction projects. The Accessibility Guidelines provide one nationwide standard and includes scoping provisions which are also consistent across the United States. The problem, however, is that ADA does not simply replace existing accessibility requirements, but creates an additional standard. As mentioned before, most states include some form of barrier-free legislation as part of their building code. In addition, UFAS is still considered the federal standard for accessible design, although Title II of ADA allows either UFAS or the ADAAG to be used in state or local government projects. The three major standards, ANSI A117.1, UFAS and the ADAAG are similar in scope and content, but there are some key differences. With at least one other standard in addition to the ADAAG applicable to most projects, conflicts and confusion may result.

In order to alleviate some of this confusion, several key organizations involved in drafting accessibility standards have begun an active campaign for uniformity among their respective standards. Currently, the ANSI A117.1 Committee, all of the model building code organizations and several state legislatures are working toward concurrence with ADA and each other in matters of access to the built environment.

The state of Ohio has taken an important initiative in establishing access requirements which concur with ADA's provisions. Ohio Amended Substitute House Bill 321, which was signed into law during the summer of 1992, mandates the application of FHAA and ADA to all buildings which are covered by the OBBC. As required by AM Sub HB 321, the OBBC directly

references the ADAAG and the FHAA guidelines, with their respective scoping provisions. These standards apply to all buildings requiring plan approval in the state of Ohio. Since the Board of Building Standards does not have jurisdiction over existing buildings, barrier removal provisions of ADA have not been incorporated into the OBBC.

However, facilities belonging to religious entities and private clubs, which are not covered under ADA, are now subject to the specifications of the ADAAG under the OBBC since such facilities require plan review in the state of Ohio.

HB 321 vastly improves the uniformity of access legislation, at least in Ohio, by effecting two major changes in state law. The first change is that accessible units are mandated in all housing projects, not just those receiving assistance from the Ohio Finance Agency (see Appendix I). The second result of HB 321 is the elimination of the scoping provisions in Section 512.0 of the OBBC through the incorporation of ADA's nationwide scoping provisions.

Legislation and Regulations

Income Tax Deductions

Tax incentives for compliance with the ADA have taken the form of legislation.

On November 5, 1990, President Bush signed the Omnibus Reconciliation Act. The Act added Section 44 to the Internal Revenue Code to create an annual tax credit "for the purpose of enabling...eligible small businesses to comply with applicable requirements under the Americans with Disabilities Act of 1990." Owners may claim 50 percent of expenditures made to remove barriers in existing facilities or to provide auxiliary aids, up to a maximum credit of $5,125. Any qualified expenditures made after November 5, 1990, are eligible for this credit. In the same legislation, the annual deduction for barrier removal allowed by the Internal Revenue code under Section 190 was reduced to $15,000 from $35,000. The provision is in effect beginning with the 1991 taxable year.

For further information, contact either your local IRS office or Office of Chief Counsel, Internal Revenue Service, 111 Constitution Ave., NW, Washington DC 20224; 202/566-3292. Toll-free assistance is available for all federal tax questions at 800/TAX-1040; forms and publications may be ordered at 800/TAX-4477.

ENDNOTES

1. Department of Housing and Urban Development, Office of the Assistant Secretary for Fair Housing and Equal Opportunity. *Federal Register,* Final Fair Housing Accessibility Guidelines, Vol. 56, No. 44, Part V (Washington, DC: March 6, 1991), page 9499.

2. Department of Justice, Office of the Attorney General. *Federal Register,* Nondiscrimination on the Basis of Disability in State and Local Government Services; Final Rule, Vol. 56, No. 144, Section 35.1.105 (Washington, DC: July 26, 1991), page 35718.

3. Ibid., page 35720.

4. Ibid.

5. Building Owners and Managers Association International, *ADA Compliance Guidebook: A Checklist for Your Building* (Washington, DC: 1991), page 3.

6. *Federal Register,* Nondiscrimination on the Basis of Disability by Public Accommodations and in Commercial Facilities; Final Rule, op.cit., Subpart B, Sections 36.202(a) and 36.203(a), page 35595.

7. Ibid., Subpart A, Section 36.104, page 35594.

8. *ADA Compliance Guidebook,* op. cit., page 6.

9. Ibid., page 7.

10. The issue of detectable warnings at curb ramps is a prime example. ANSI requires raised strips which cause problems for people using wheelchairs and require specialized maintenance. ADA's required "truncated domes" have proven unsuccessful and have been removed from the latest version of the ADAAG. People with visual impairments and trainers of dog guides strongly agree with the concept of detectable warnings, but few agree on what form they should take. All parties concerned, however, agree on the need for consistency. Every time regulations change, dogs must be retrained and people who use canes must learn a new set of tactile cues.

    U.S. Architectural & Transportation Barriers Compliance Board. *Regulatory Impact Analysis for Final ADA Accessibility Guidelines for Buildings & Facilities (draft)* (Washington, DC: October 10, 1991), pages 18-21.

12. Ibid., page 16.

13. Jan Sokolnicki, "Update on Accessibility Requirements," *Code News: A Journal on Building Construction Law and Code Enforcement in Ohio* (July/August 1991), pages 65-66.

Basic Human Dimension Data

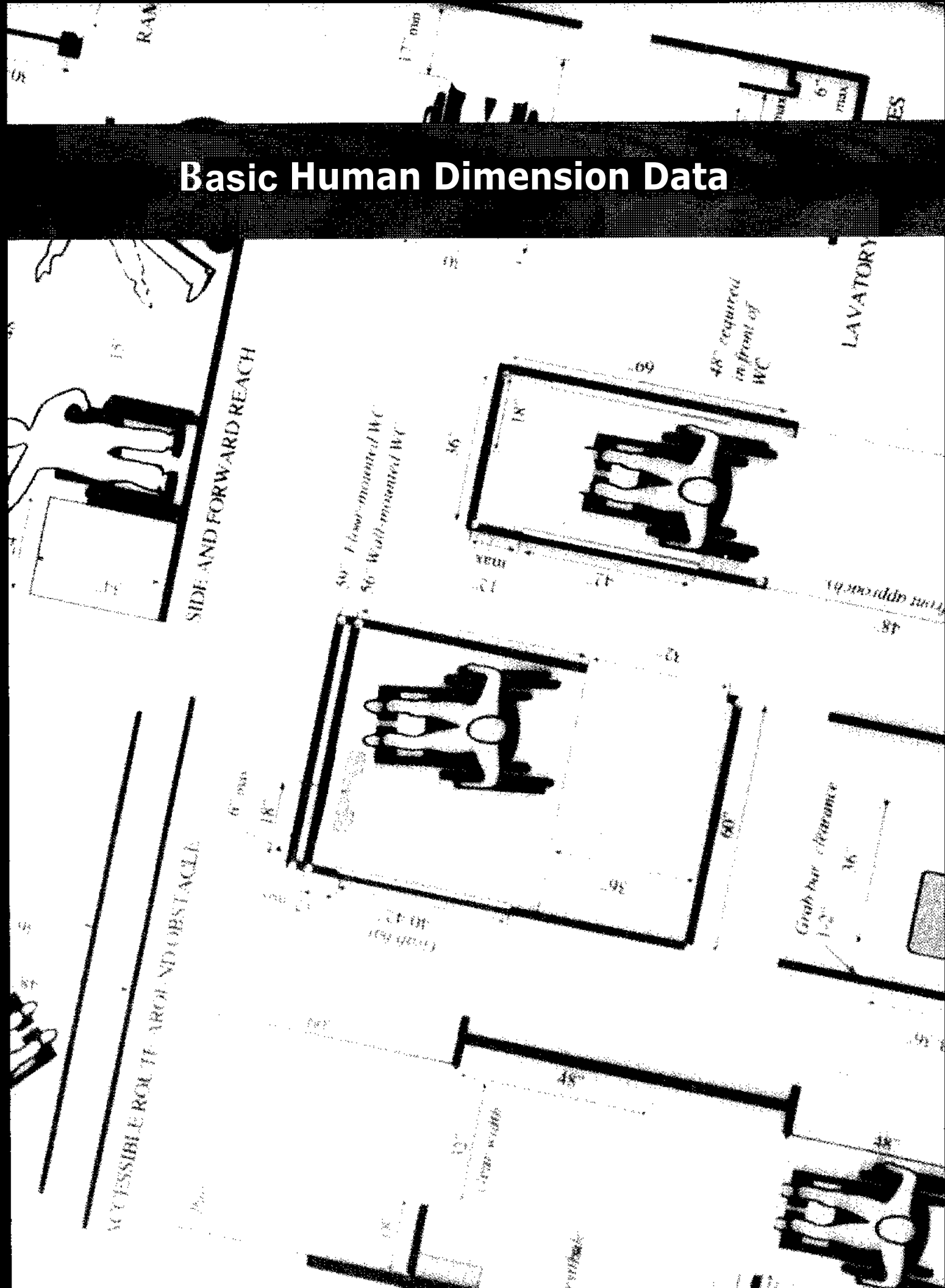

Basic Human Dimension Data

Designers have traditionally designed sites, buildings, vehicles and furniture with the average-size person in mind. This statistically-based "average" person has generally been an adult male without disabilities.

The result has been an environment which does not really meet the size and spatial requirements of many, if not most, of its users. The needs of extremely small or large adults, children, and persons who have physical disabilities have been overlooked in most of the criteria used to design the built environment. Although it can serve as only a general guide, this section should provide increased awareness of the spatial requirements of all people, especially those with disabilities.

As the illustrations on the following pages show, the eye and arm levels of people in wheelchairs are considerably lower than average, standing adults. This data is particularly significant in determining reach ranges, work surface heights and maximum heights for storage units, controls and signage. It is important to keep in mind that most accessibility guidelines such as ADA, ANSI, UFAS and others are based on "average" dimensions for people in wheelchairs. The arm and eye levels of elderly people and children using wheelchairs can vary widely from those norms, and should also be considered in the design of a barrier-free environment.

> Special emphasis is given throughout this book to spatial requirements which result from the use of wheelchairs because persons using wheelchairs account for a significant percentage of people with disabilities, and because spatial requirements for such persons generally meet or exceed the requirements of persons with other disabilities.

The sources for the anthropomorphic data in this chapter are as follows:

Charles George Ramsey and Harold Reeve Sleeper, *Architectural Graphic Standards,* eighth edition, prepared for the American Institute of Architects, John Ray Hoke, Jr., AIA, editor (New York: John Wiley & Sons, 1988), pages 2-8.

Julius Panero, AIA, ASID and Martin Zelnik, AIA, ASID, *Human Dimension & Interior Space, A Source Book of Design Reference Standards* (New York: Whitney Library of Design, 1979). Dimensions for adults are on pages 85-98; dimensions for children are on pages 106-110.

The template on the preceeding page is courtesty of the Barrier-free Design Center of Herman Miller.

Basic Human Dimension Data

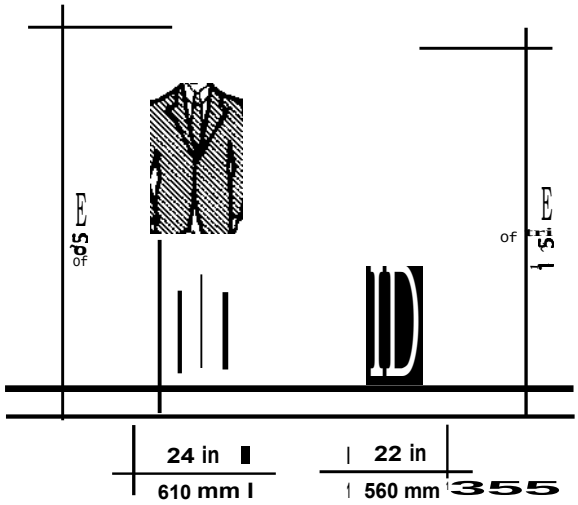

Man and Woman without Disabilities

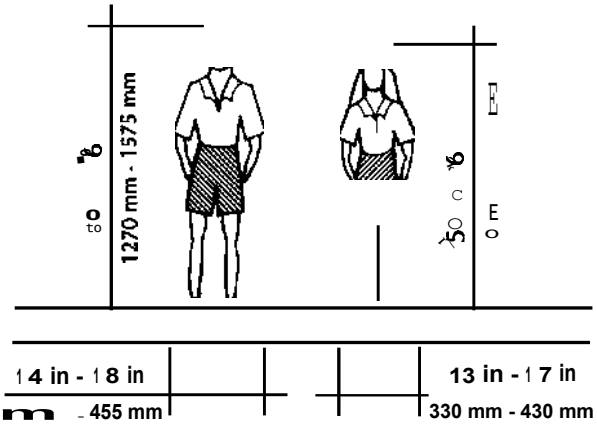

Children without Disabilities

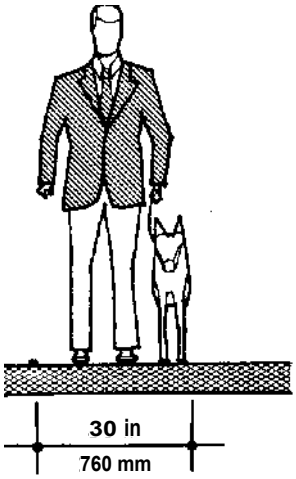

Man with Dog Guide

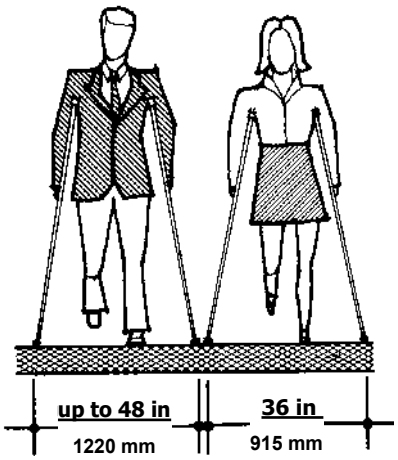

Man and Woman on Crutches

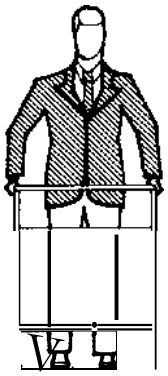

Man with Walker

Basic Human Dimension Data

People who use wheelchairs need wider spaces to move aboutthan average standing adults. However, people who use other mobility aids such as walkers or crutches, parents with strollers, people with dog guides or canes, or those carrying large objects may need wider spaces than even people using wheelchairs. This data is significant in determining not only the width of pathways, ramps, stairs and doorways but also the size of toilet stalls and clear floor space.

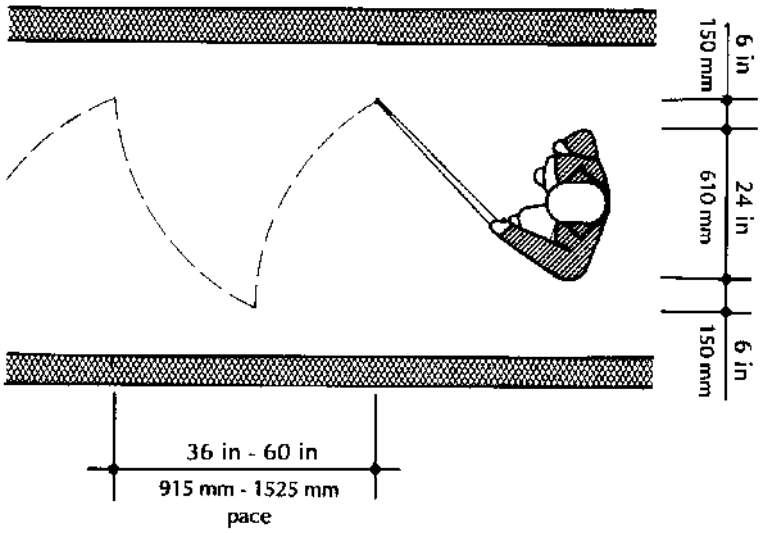

Cane Technique

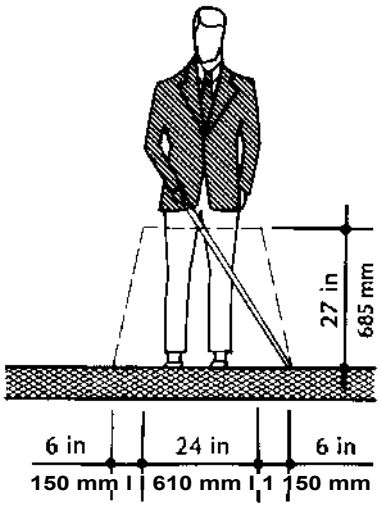

Cane Clearances

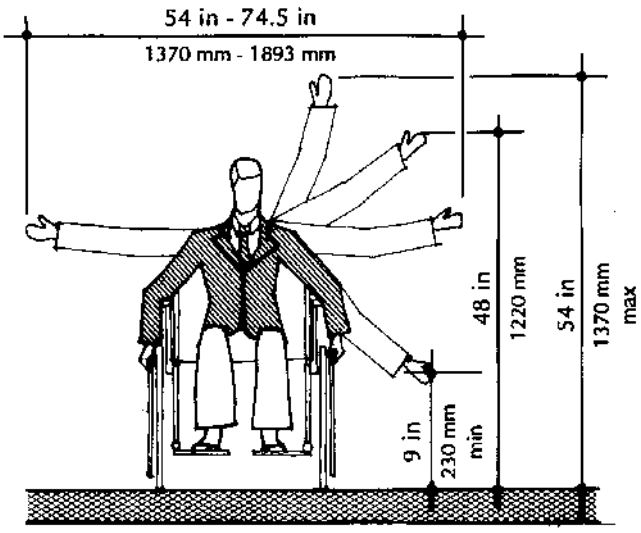

Adult's Area of Side Reach

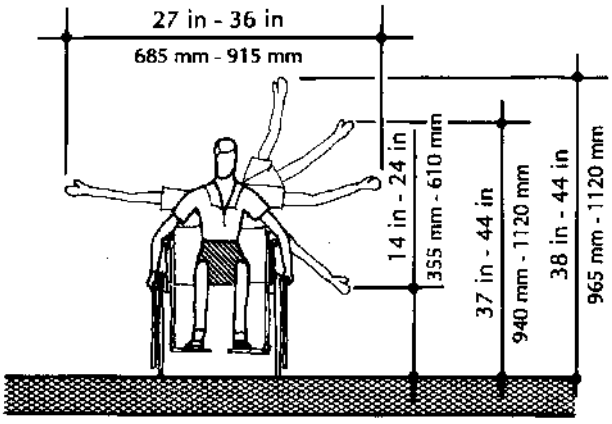

Child's Area of Side Reach

Basic Human Dimension Data

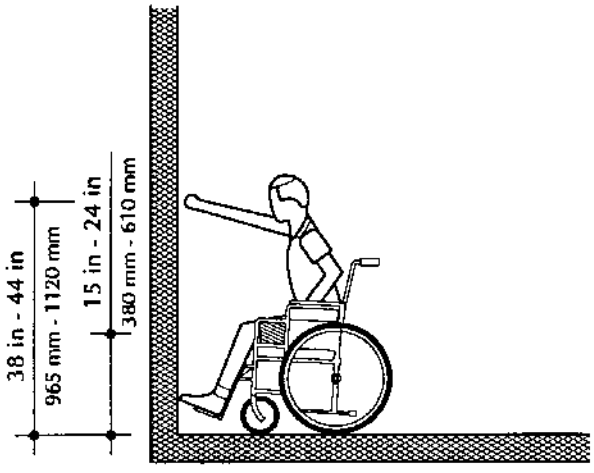

Child's Forward Reach

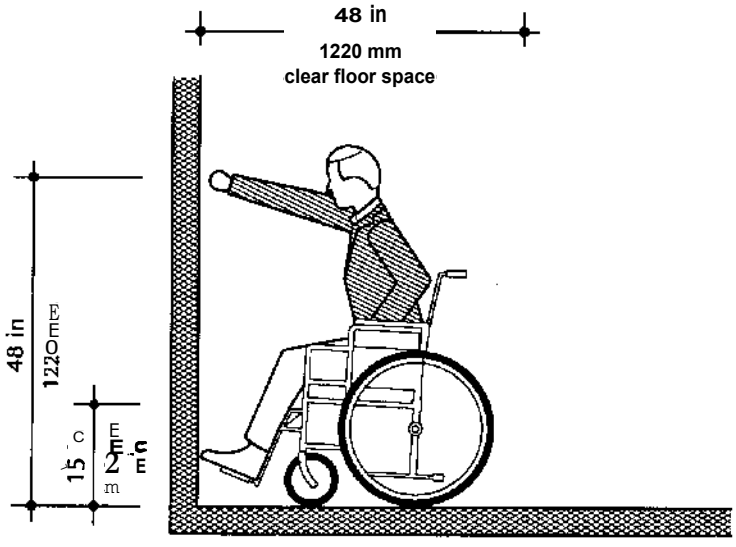

Adult's Forward Reach

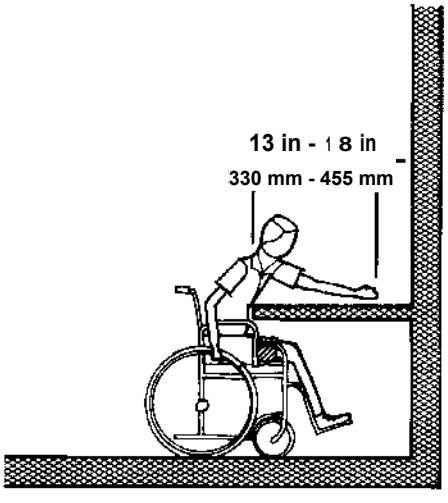

Child's Front Reach Over Counter

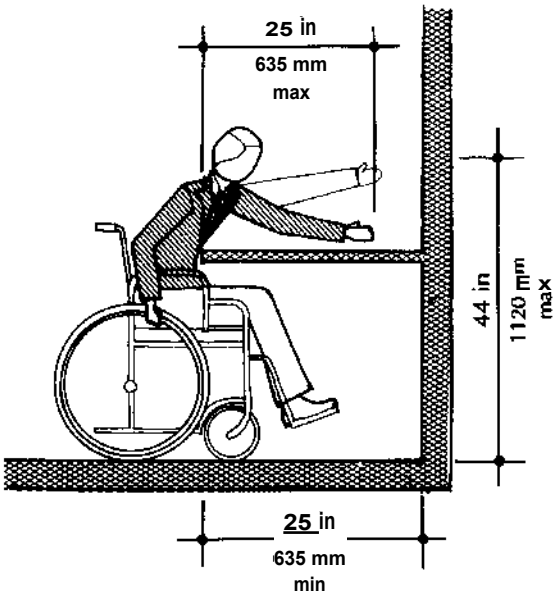

Adult's Front Reach Over Counter

Basic Human Dimension Data

A large portion of most accessiblity guidelines is based on the maneuvering and turning spaces required by people who use wheelchairs. This data is useful in the planning of areas such as restrooms, corridors and entrances, as well as the placement and spacing of furnishings in public areas such as lobbies, auditoriums and libraries.

The chart on page 48 illustrates some of the standard dimensions of manual and motorized wheelchairs which are commonly used today. Although many people still use manual wheelchairs, a significant number of people now use motorized ones. Wheelchair technology has developed to the point where motorized chairs can be used by people with very little mobility. Models are available which can be guided by use of a mouthstick, the nod of a head or even voice commands. As such technology becomes advanced to allow people with more severe mobility limitations to use wheelchairs, the proportion of motorized chairs will continue to increase.

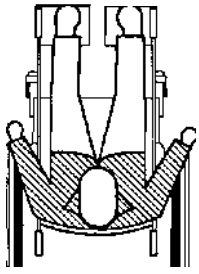

36 in
915 mm
min
passage

Absolute Minimum Corridor Width for Single Wheelchair

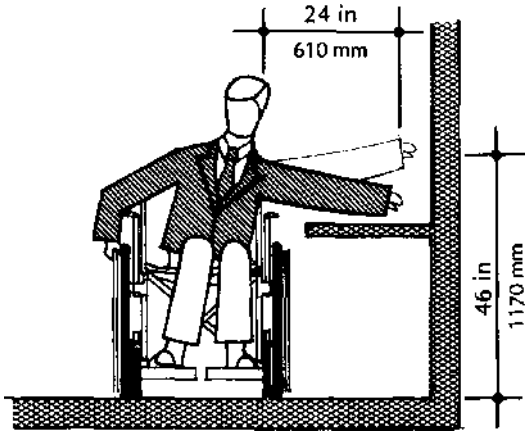

Adult's Side Reach Over Counter

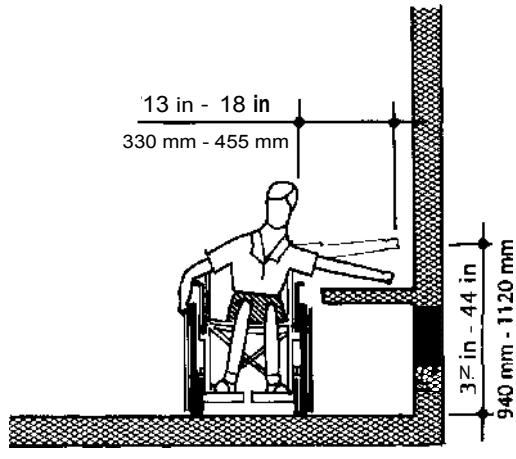

Child's Side Reach Over Counter

Basic Human Dimension Data

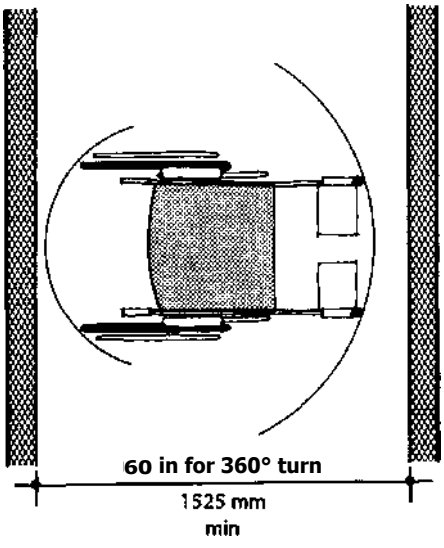

Minimum Corridor Width
for Turning a Wheelchair

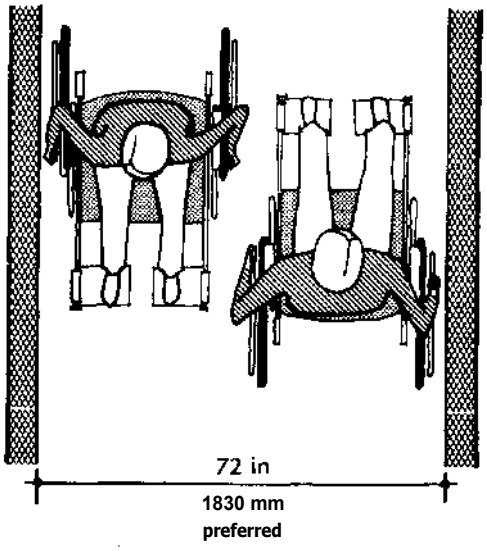

Two Wheelchairs Passing in Corridor

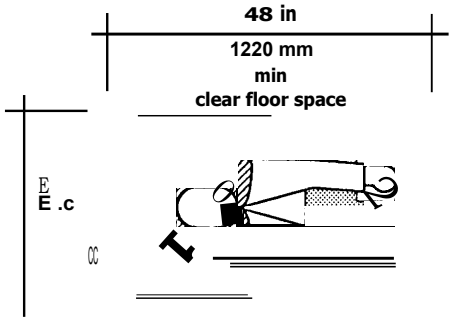

Minimum Clear Floor Space
for Parallel Approach

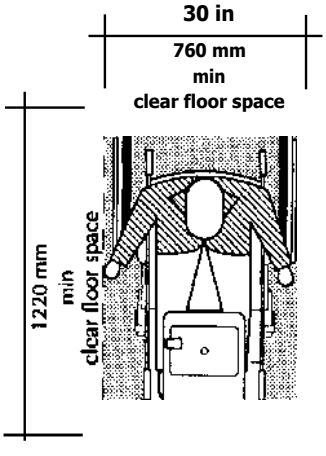

Minimum Clear Floor Space
for Forward Approach

Basic Human Dimension Data

Range of Adult Wheelchair Measurements

	Manual		Motorized	
Height: Arms from floor	25 - 31.5 inches	(635 - 802 mm)	30 - 35 inches	(760 - 890 mm)
Height: Seat from floor	17.75 - 20 inches	(449 - 510 mm)	20.75 inches	(529 mm)
Foot rest: Minimum extension	14.5 - 15.75 inches	(368 - 399 mm)	15 - 18 inches	(380 - 455 mm)
Foot rest: Maximum extension	20.75 - 21 inches	(529 - 535 mm)	21 - 22.5 inches	(535 - 573 mm)
Wheel Diameter: Front	5 - 8 inches	(125 - 200 mm)	23.5 inches	(598 mm)
Wheel Diameter: Rear	22 - 24 inches	(560 - 610 mm)	20 inches	(510 mm)

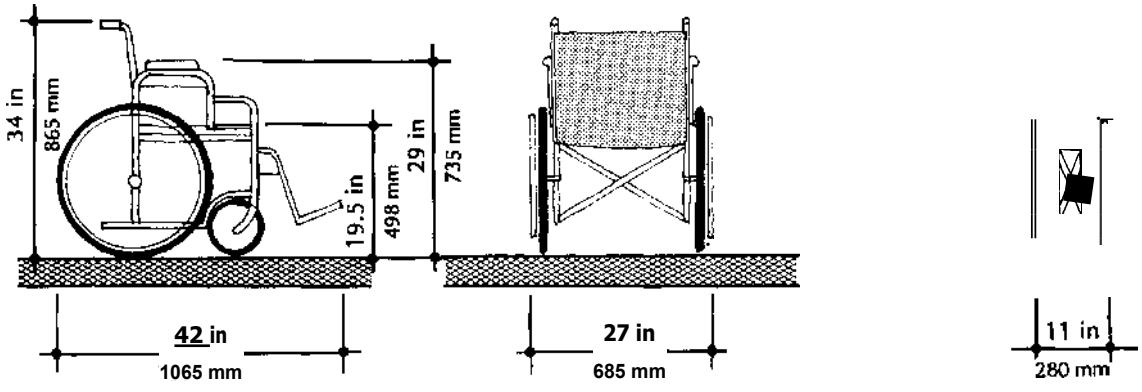

Side View Rear View Folded View

Average Adult Chair Measurements

Disabilities Without Dir

This chapter is by no means comprehensive. It provides data only for those disabilities which have or create a dimensional need that is different from one of the standard averages used for most design. There are a whole range of other disabilities which will affect the design and organization of the built environment, but will affect its dimensions in a much less direct manner. Such disabilities include, but are not limited to, hearing impairments, cognitive impairments, and some activity limitations. Excluding specific data pertaining to design for such disabilities from this chapter is not meant to imply that this data is being overlooked. In fact, an attempt has been made to thoroughly address the architectural requirements of disabilities without dimension throughout this book.

Site Design Features

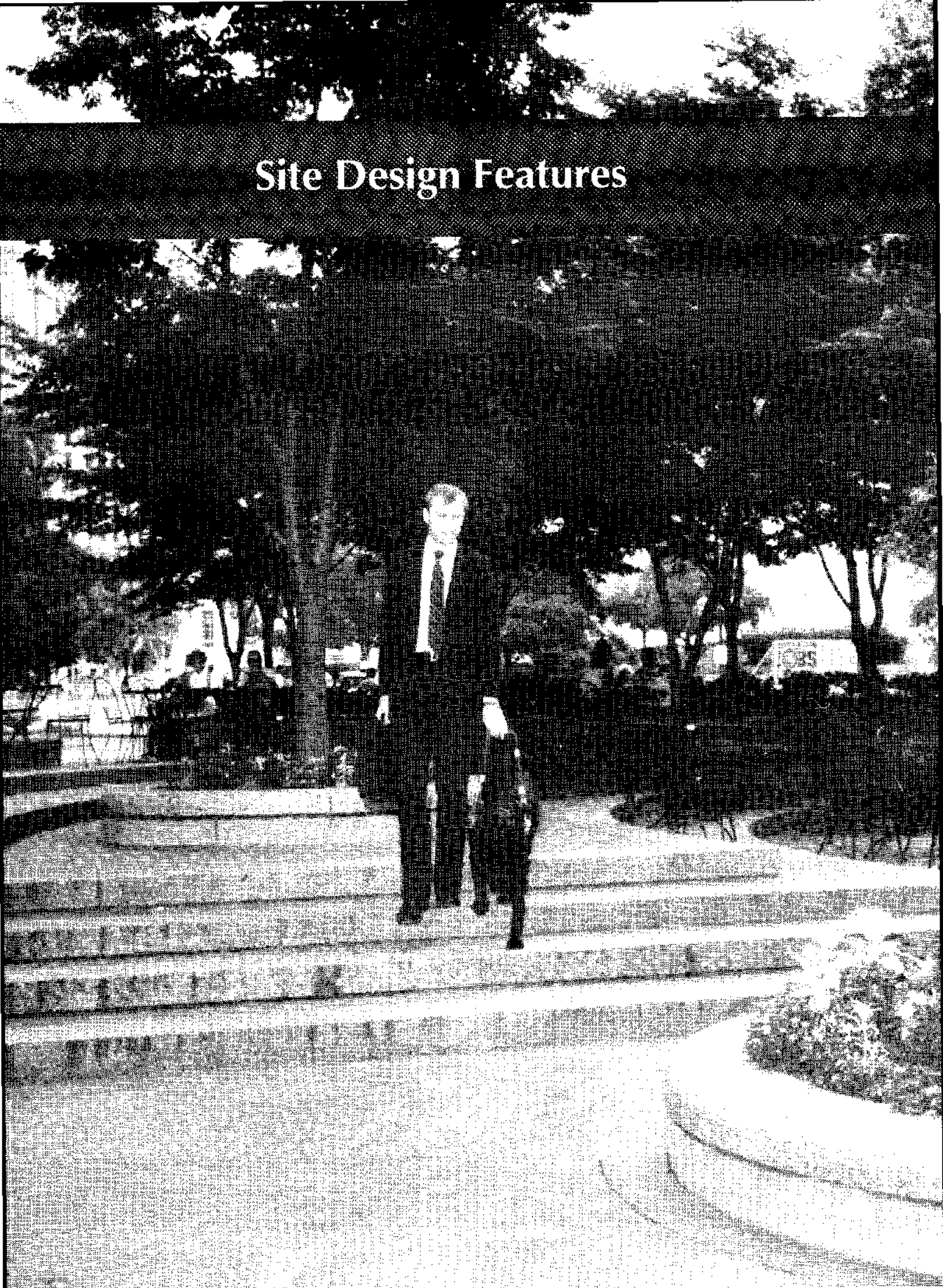

Site Design Features

Today there is growing emphasis upon encouraging people with disabilities to lead more productive lives by taking advantage of educational and employment opportunities and by participating in community and cultural offerings. While barrier-free architecture is becoming a reality due to federal, state and local codes and legislation, provisions which assure barrier-free site design often have been overlooked in the past.

If those who use the buildings cannot travel from automobiles, passenger loading zones, public streets and sidewalks or public transportation stops to building entrances, then the total environment is not truly barrier free. This chapter deals with the outdoor environment, or building site.

Every building site must have at least one accessible route which leads to an accessible building entrance. This accessible route should coincide with the route used by the general public. Unless the forms of transportation, site elements and building entries are interrelated and accessible, the value in making any one of these components more accessible is lost. It is therefore crucial that all elements of pedestrian circulation on the building site be made as barrier-free as possible.

The photo on the preceeding page is by McGuire-Willis & Associates, Columbus, Ohio.

Site Access

Drop-off Zones

Well-placed drop-off zones can greatly enhance site accessibility for persons with mobility impairments. Drop-off zones should be as close as possible to an accessible building entrance, be identified by a sign showing the International Symbol of Accessibility, and directly connect with other site features such as site entrances and parking areas.

An adjacent access aisle for an exiting passenger should be a minimum of 60 inches (1,525 mm) wide and have a minimum length of 20 feet (6 M) parallel to the vehicle. A vertical clearance of 114 inches (2,895 mm) should also be maintained. To facilitate wheelchair use, no grade change should occur between the road surface and the access aisle adjacent to the drop-off zone.

Site Entrances

The location of accessible building entrances should be clearly evident to persons arriving on foot or by means of wheelchair, automobile or public transportation.

Parking

Automobiles and vans provide the primary means of transportation to many sites for persons with disabilities. The site walkway system should connect the parking areas with the accessible building entrances. It is recommended that special ly-designed parking spaces for persons with physical impairments be located within 100 feet (30M) of accessible building entrances. The parking surface should slope no more than 1:50 (2 percent) in all directions. For more information, see the section, "Parking and Vehicular Considerations," beginning on page 54.

Site Access

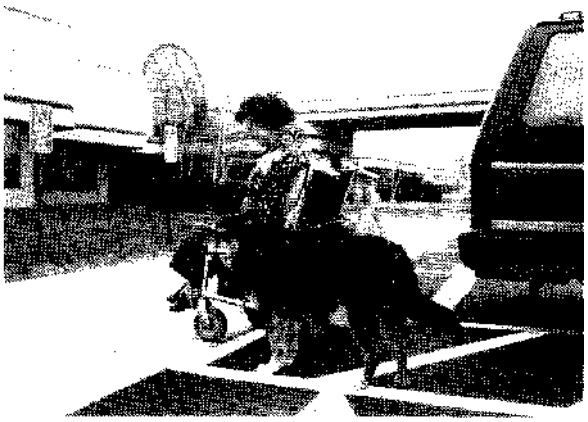

Walkways

Walkways should provide clearly defined, unobstructed, direct routes through the site. Walking surfaces need to be firm, stable and slip resistant and curb ramps should be provided as necessary. Walkway widths are generally sized to accommodate anticipated pedestrian traffic volume. For further information, seethe section, "Walkways and Curb Ramps," beginning on page 57.

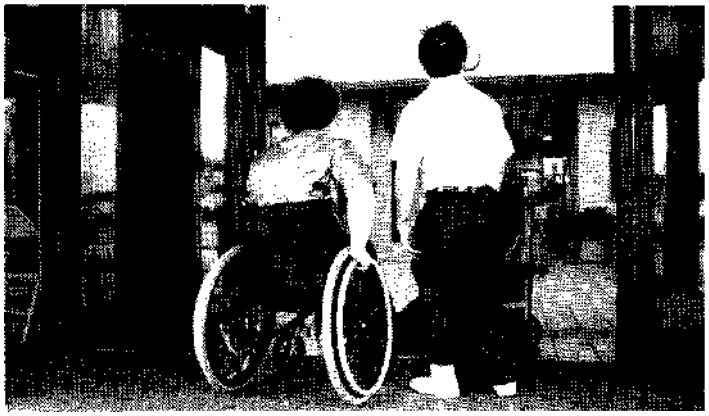

Building Entrances

Accessible building entrances need to be clearly identified. In new construction, the accessible entrance — if all cannot be made accessible — should be the main entrance into the lobby or vestibule. This will provide convenient access to public amenities such as rest rooms, telephones and drinking fountains without grade changes for ***all*** building users.

Rest Areas

Wherever pedestrians are required to walk more than 200 feet (61 M), a rest area is recommended. Rest areas, which can be simple seating arrangements, should be located out of the main pedestrian traffic flow.

Signage

Adequate directional and informational signage must be provided to mark pedestrian and vehicular site access. Signs designating accessible building entrances, parking and specific destinations within the site context are especially important. Signage should be illuminated for visibility after dark. Accessible building entrances should be marked with the International Symbol of Accessibility (see Appendix IV).

Waiting Areas for Public Transportation

Whenever possible, waiting areas for public transportation should be located within 200 feet (61 M) of the building entrance so that rest areas are not necessary between the building and exterior waiting areas. Waiting areas should protect users from inclement weather. Traffic visibility, adequate seating and lighting and an accessible public telephone are important. The waiting area should be located out of the sidewalk traffic flow, preferably adjacent to the curb.

Parking and Vehicular Considerations

To be accessible, both head-in and diagonal parking spaces should be at least 96 inches (2,440 mm) wide. An adjacent access aisle should be at least 60 inches (1,525 mm) wide along one side. Two accessible parking spaces may share a common access aisle.

In addition, a van-accessible space with an aisle at least 96 inches (2,440 mm) wide should be provided for no less than one in every eight accessible spaces.

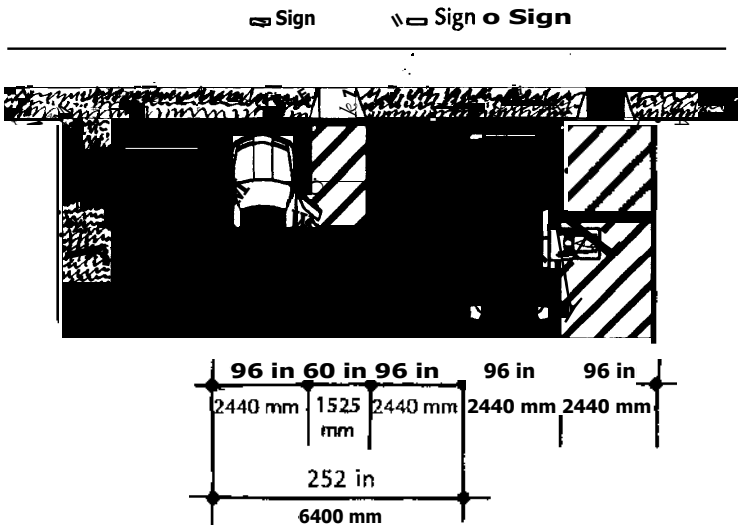

Van-Accessible Space at End of Row

The importance of parking accessibility for persons with disabilities cannot be over emphasized. In addition to public transit, the primary means of travel for most people who have disabilities is a vehicle with operating controls which are modified to meet user needs. Accessible parking requires additional space; the standard parking stall, which is 96 to 108 inches (2,440 to 2,750 mm) wide, is not wide enough to accommodate a standard car and a wheelchair or a van equipped with a power lift. Extra space between cars and modified vans is also necessary for easy maneuvering by persons using crutches, canes or other mobility aids.

Accessible parallel parking must provide at least 60 inches (1,525 mm) of clear space at the same level as the parking space. Clear space beside parallel parked cars should not be limited to the passenger side. When possible, provide an equal number of parallel parking spaces that are accessible from the passenger side as well as the driver side.

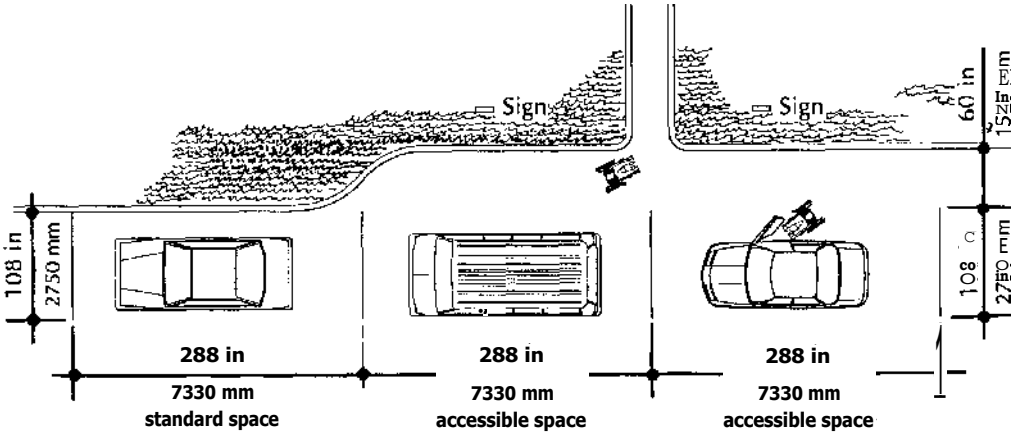

Parking spaces that are reserved for persons with disabilities should be clearly identifiend with signs displaying the International Symbol of Accessibility. Signage noting van accessibility should be located below the general symbol of accessibility; if all spaces are universally accessible, this additional sign is not necessary. Signs should be located so they are not obscured by parked vehicles. Access aisles should be identified with painted graphic striping or cross-hatching. For further information, see "Site Signage," which begins on the next page.

The number of parking spaces provided for people with disabilities in any project should conform to the table below.'

TOTAL PARKING IN LOT	REQUIRED MINIMUM NUMBER OF ACCESSIBLE SPACES
1 TO 25	1
26 TO 50	2
51 TO 75	3
76 TO 100	4
101 TO 150	5
151 TO 200	6
201 TO 300	7
301 TO 400	8
401 TO 500	9
501 TO 1000	2% OF TOTAL
1001 AND OVER	20 PLUS 1 FOR EACH 100 OVER 1000

These spaces should be located as close as possible to an accessible building entrance, or should be located centrally in parking lots between buildings. Maximum recommended travel distance between accessible parking spaces and building entrances is 200 feet (61 M).

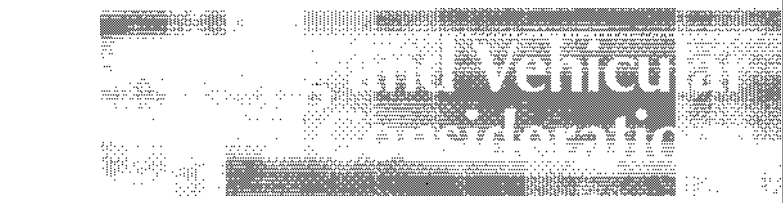

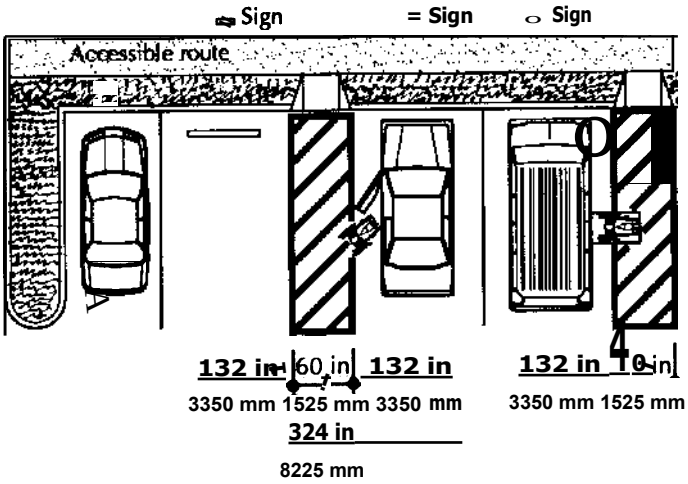

Universal Parking Space Design

Universally accessible spaces that accommodate either cars or vans may be used instead of standard spaces. These universal spaces require a minimum width of 132 inches (3,350 mm) with an adjacent access aisle at least 60 inches (1,525 mm) wide along one side. ADA requires that all parking spaces which are van accessible, including universal spaces, provide a minimum vertical clearance of 98 inches (2,490 mm). Many people with disabilities drive raised roof or high top vans which require high clearances. It is therefore recommended that all van-accessible parking areas, including garages, provide at least 114 inches (2,895 mm) of vertical clearance. It is important that this clearance be maintained not only at parking spaces, but at entrances and vehicular routes as well.

Site Signage

Well-designed site signage provides place identification and routing information for all users. In addition, signage can perform an extremely valuable service by identifying accessible facilities and amen i-ties. Barrier-free environments should be readily identified, so that full use may be made by everyone.

Examples of access-related site signage include:

- Accessible recreation
- Accessible building entrances
- Reserved parking for persons with disabilities
- Accessible telephones
- Directional signs and maps
- General information
- Accessible public rest rooms

For more information on sign design, see "Interior Signage," beginning on page 123.

The International Symbol of Accessibility should be used only on facilities that conform to accepted standards of accessibility. This symbol should be used only to indicate full access, assuring a person with disabilities that he or she will not be barred from complete use of the facilities. Additional information regarding use and design of the International Symbol of Accessibility may be found in Appendix IV.

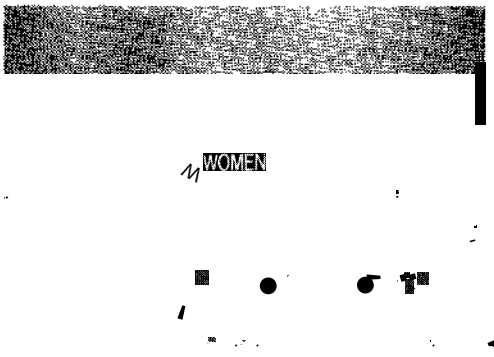

Site signage should be located so that it does not become a hazard or an obstacle itself. Overhead signs should be carefully located out of the way of pedestrian or vehicular traffic. Ground signs and standards should not impede pedestrian traffic.

Walkways and Curb Ramps

Walkways

Any pedestrian path with a gradient of less than 1:20 (5 percent) is a walkway; steeper paths are called ramps. See the section, "Outdoor Ramps, Stairs and Handrails," beginning on page 61. Wherever possible, walkway gradients should be held to 1:33 (3 percent) or less to prevent excessive fatigue for persons using wheelchairs. If 1:25 to 1:20 (4 to 5 percent) slopes are necessary, level resting areas which are at least 60 inches (1,525 mm) long should be provided at 100-foot (30 M) intervals.

The design of sidewalks in public right-of-ways is usually governed by local codes.

Width

Site walkways should be adequate to meet projected pedestrian traffic demands. Two-way walks at least 60 inches wide (1,525 mm) are recommended, and walkways should be no less than 36 inches (915 mm) wide. Heavily-traveled walkways need to be at least 72 inches (1,830 mm) wide.

Materials and Surfaces

Use of grass, crushed rock, gravel and wood chips for walkway paths should be avoided, as these soft materials present difficulties for persons with mobility impairments. However, the intent of this section is not to prohibit such materials where their textures and colors are appropriate additions to the environment. The suggestion is that "soft" materials be used judiciously with respect to traffic volume and expected users.

For general use, concrete or asphalt walkway surfaces are best. Brick, tile, cobbles and flagstone are also good if they are installed over a concrete bed; hairline joints should be used whenever possible. When properly installed, these surfaces remain firm and relatively stable through freeze-thaw cycles. In urban spaces where several paving surfaces are contemplated, it is suggested that textured materials such as cobbles be reserved for those areas which are out of the main stream of pedestrian traffic.

Concrete walkways require non-slip surfaces for safety. The recommended treatment is a broom finish, with the striations perpendicular to the direction of travel. Expansion joints should not exceed 1/2 inch (13 mm) in width, and their number should be minimized.

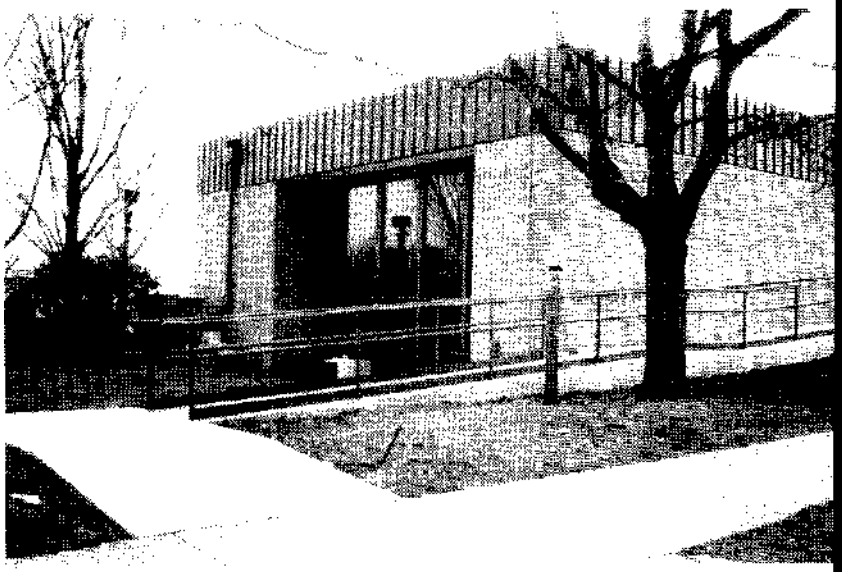

Walkways

Asphalt walkways should be placed on thoroughly compacted substrata to prevent settling which would allow puddles to form. All walkways should be sloped or crowned to al low adequate water run-off, but should not be high enough to hinder wheelchair movement.

Handrails should be provided where the grade beside a walkway is more than 6 inches (150 mm) below the walkway surface or where it slopes steeply away from the walkway. For additional handrail information, see "Handrails" on page 67.

Site Obstacles

Obstacles such as utility poles, mailboxes and storm drains and catch basins which have surface gratings should be located out of the path of pedestrian travel.

When catch basins cannot be avoided along a walkway, they should have gratings that are flush with the surrounding pavement and openings less than 1/2 inch (1 3 mm) in any direction. Gratings with parallel bars tend to trap wheels; gratings with openings larger than **1/2** inch (13 mm) in any direction tend to trap the tips of canes, crutches and other walking aids.

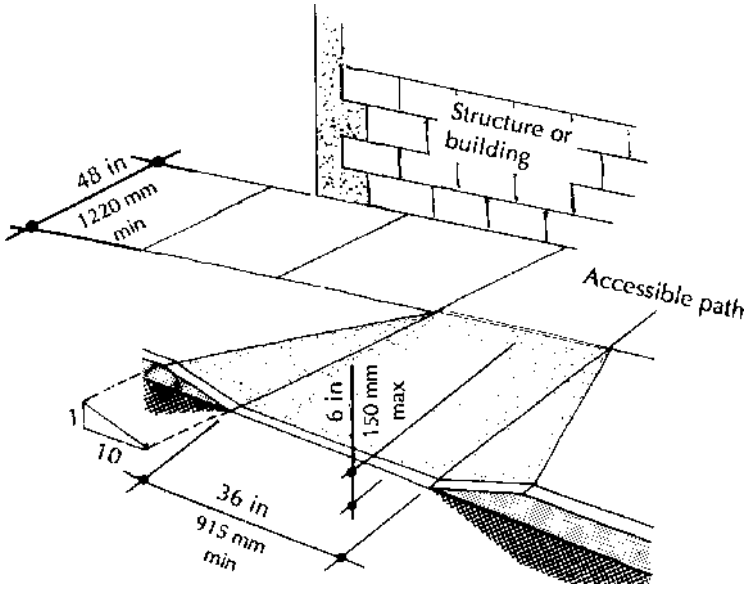

Curb Ramp

Curb Ramps

Curb ramps to walkways should be aligned to the direction of travel whenever possible. It is just as important, however, that curb ramps not be located in a manner which would create a hazard to cross-traffic. The best location for a curb ramp is between the outer edge of the sidewalk and the curb, since this location does not impede people with visual impairments or people using canes, walking aids or crutches.

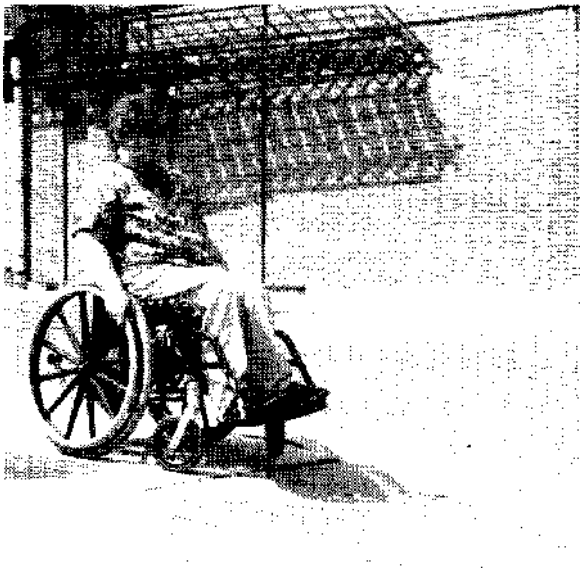

Gradient

Curb ramp gradients should not exceed 8.3 percent (one unit of height to twelve units of length). If existing conditions prohibit the use of a 1:1 2 ramp, slopes of 1:10 for 6 inches minimum or 1 :8 for 3 inches maximum may be used. Ideally, the transition between the bottom of the curb ramp and the asphalt should be flush. If a lip occurs due to variations in the level of the asphalt, it should never be more than 1/4 inch (6.5 mm) high.

LEFT: If a curb ramp is located where pedestrians must walk across the ramp or where it is not protected by handrails or guardrails, it should have flared edges. The maximum slope of the flare should be 1:10 (10 percent). When the accessible path or walkway located between the curb ramp and adjacent structure is less than 48 inches (1,220 mm), the slope of all flared sides should not exceed 1:12 (8.3 percent.)

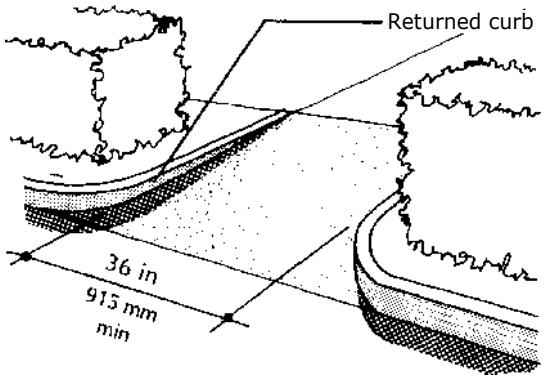

This configuration of a returned curb ramp allows a tactile reference point for persons with visual impairments. Plantings or other non-walking surfaces flank the ramp. This type of ramp should only be used where pedestrians would not normally walk across the ramp.

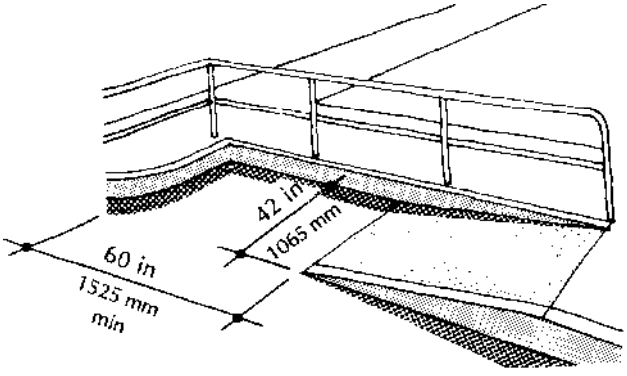

If curb height exceeds 6 inches (150 mm), a curb ramp can be run parallel to the sidewalk with a slope of 1:12 (8.3 percent), eliminating the problem of insufficient sidewalk depth to accommodate the ramp.

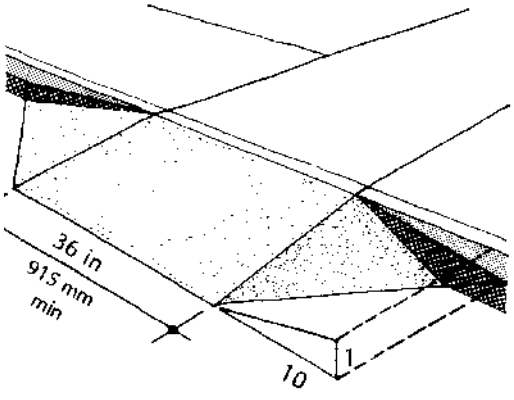

This type of curb ramp may interfere with storm drainage, street cleaning and snow plowing, and may create a hazard in drop-off zones. Its use should occur only when no other option is available. New construction should implement a curb ramp design as previously discussed.

Surface

Whenever possible, curb ramps should be concrete with a broom-finish texture to minimize ice hazards. The perimeter of the ramp should be painted yellow to aid persons who are partially-sighted.

Detectable Warnings

The purpose of detectable warnings is to notify people with vision impairments of a change in level. These warnings should extend the full width and depth of curb ramps. The boundary between walking surfaces and hazardous vehicular areas (such as where a walk crosses or adjoins a vehicular way) which are not separated by curbs, railings or other elements should be defined by a continuous detectable warning which is 36 inches (915 mm) wide.

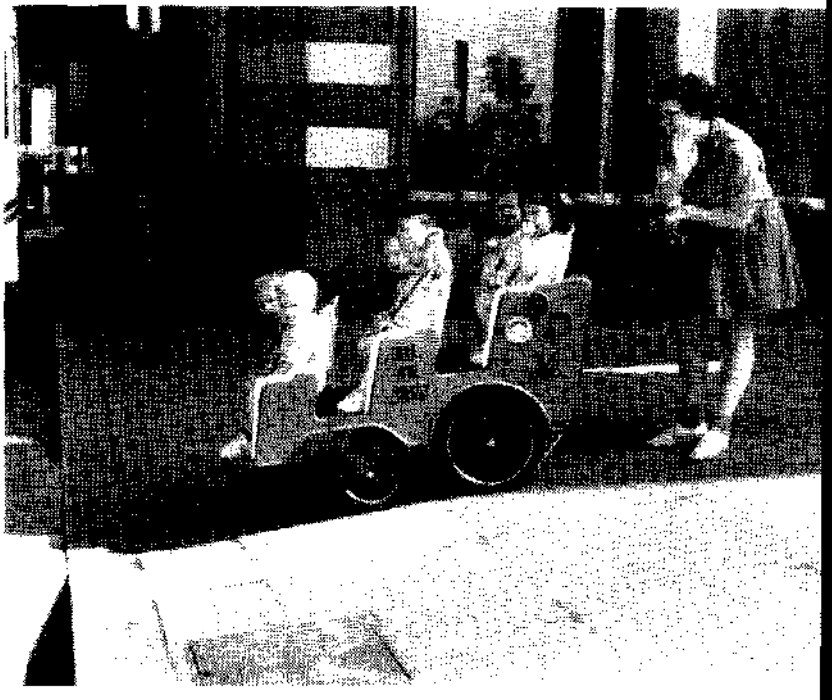

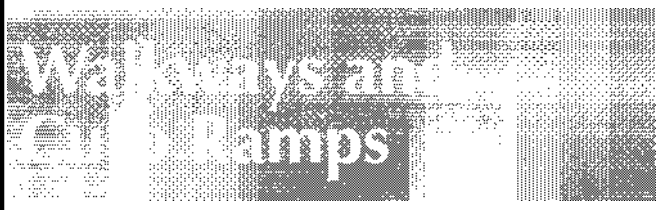

Alternative Curb Ramp Locations at Intersections

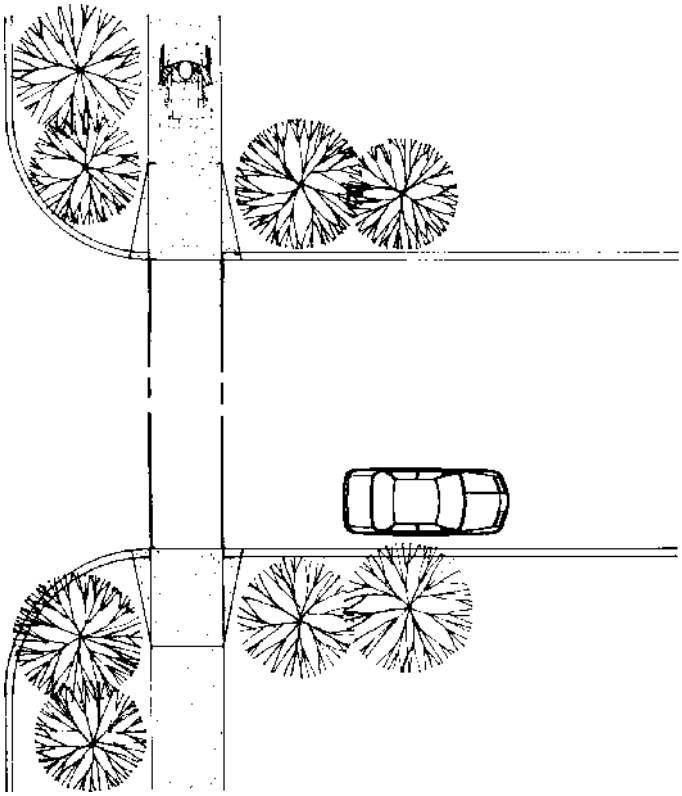

Curb ramps should align with the crosswalk and should line up across the roadway. This arrangement is preferred because it allows people with visual limitations who use canes to align themselves with the crosswalk by locating the flared edge of the curb ramp with their cane.

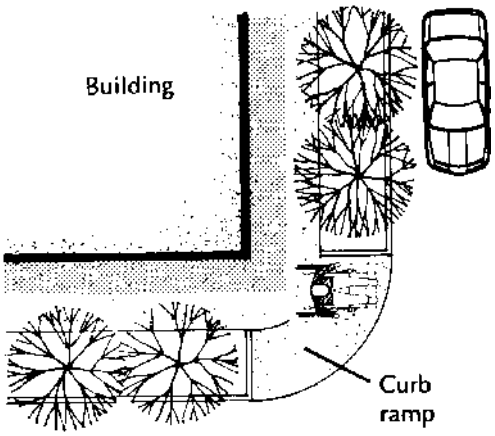

Eased corners, though usable by people in wheelchairs, can be hazardous to people with visual impairments. Such arrangements are acceptable only if a curb edge is provided at the ends of the eased corners and is aligned with the crosswalk, and if detectable warnings are provided along the ramped surface; in this way, people with visual impairments can locate the curb edge with their canes and align themselves with the crosswalk.

Outdoor Ramps, Stairs and Handrails

A change of grade occurs on most every site for both design interest and because of physical constraints. However, designers must not allow grade changes to become barriers for persons whose mobility is limited due to age or disability. Whenever possible, level changes should be accomplished by a walkway with a slope of 1:20 (5 percent) or less.

Outdoor Ramps

Where a level change cannot be achieved with a slope of 1:20 (5 percent), a ramp must be used. A ramp is any walkway surface sloped more steeply than 1:20 (5 percent). Ramps should be designed as alternate movement routes for persons who have difficulty using stairs. Ramps should not, however, take the place of outdoor stairways because some people have difficulty using ramps.

For discussion purposes, the term "ramp" does not include curb ramps. Information on curb ramps is included in the previous section, "Walkways and Curb Ramps," beginning on page 57.

The least possible slope should always be used for ramps. The maximum acceptable gradient for accessible ramps is 1:12 (8.3 percent). Thus, all ramps usable by persons in wheelchairs fall in the 1:20 to 1:12 (5 to 8.3 percent) gradient range.

Ramp lengths should not exceed 30 feet (9 M) of run without a landing which can serve as a resting place for people using wheelchairs. Ramps should be the width of the walkway they serve or a minimum of 36 inches (915 mm) wide; the recommended width is 48 inches (1,220 mm).

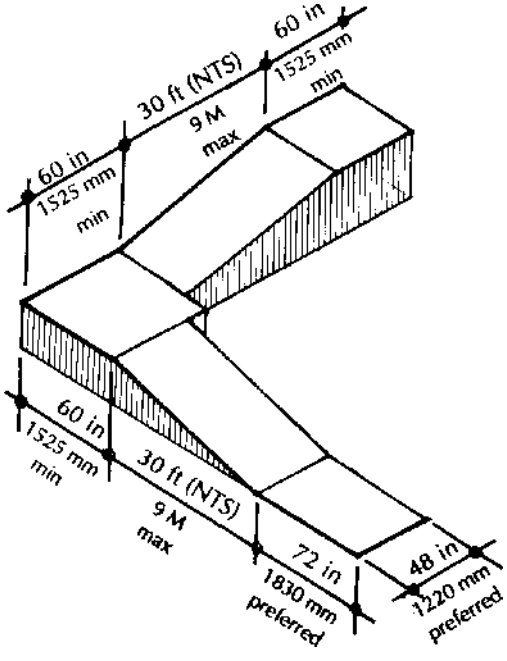

Ramp with 90 Degree Turn

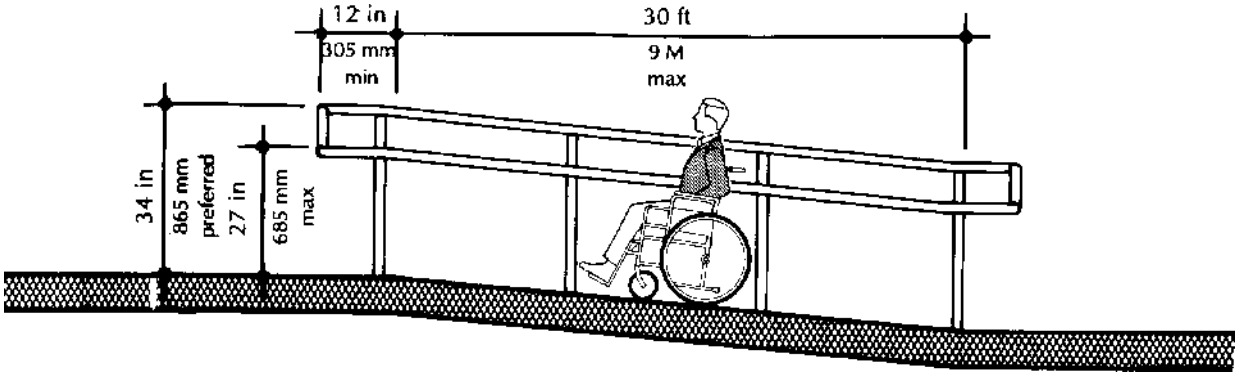

12 max

Outdoor Ramp and Handrails with Maximum Slope

Handrails should be provided on both sides of ramps to aid persons using walking aids or wheelchairs. The top of the handrail should be 34 to 38 inches (865 to 965 mm) above the ramp surface. A 34-inch (865 mm) height is recommended as this height meets both ADA and ANSI requirements. An intermediate rail at 24 inches (610 mm) is suggested for ramps that will be used extensively by children. Noncontinuous handrails on ramps should extend horizontally at least 12 inches (305 mm) beyond the upper and lower edges of the sloping ramp surface. For more detailed information see "Handrails" on page 67.

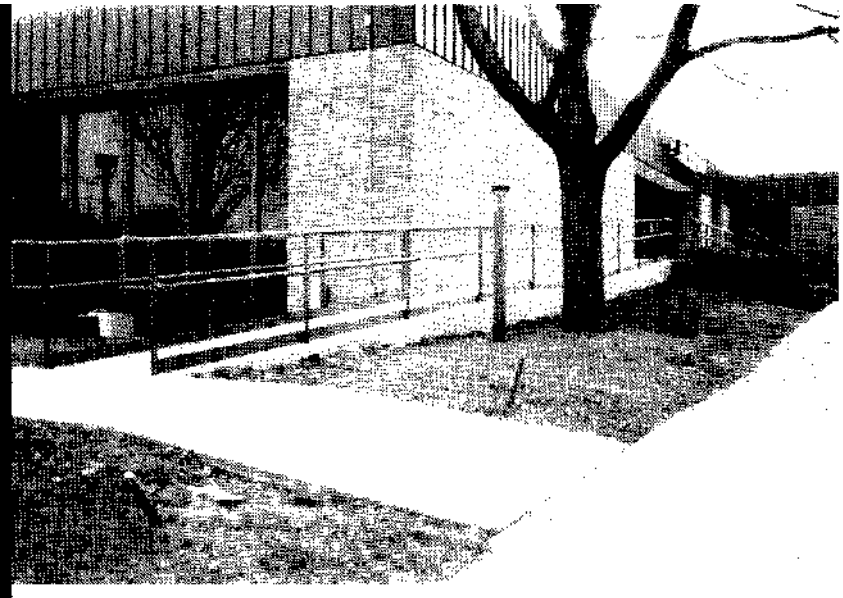

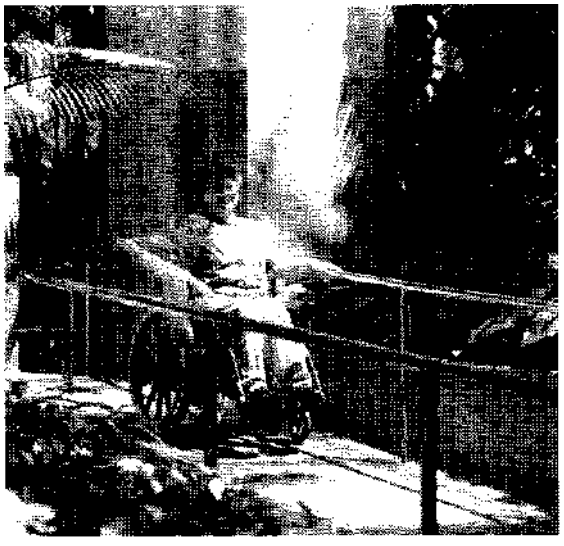

Switch-back Ramp

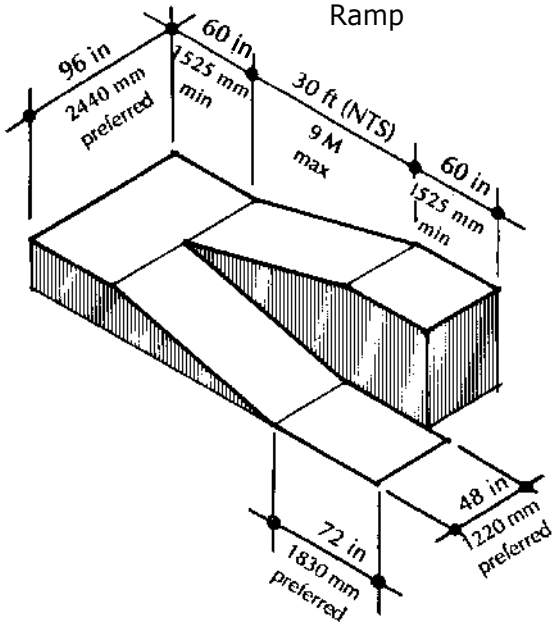

Ramps should be constructed of firm, fixed, non-slip materials. Concrete should be broom-finished across the direction of travel. Metal gratings in ramp surfaces should generally be avoided; however, where gratings must occur, openings should not exceed 1/2 inch (13 mm) in any direction.

Level areas should be provided at both ends of any ramp. The upper end of the ramp needs a level platform measuring at least 60 inches (1,525 mm) in the direction of travel; a 72-inch (1,830 mm) level area is recommended for the bottom. In long ramps, level rest areas which are 60 inches (1,525 mm) long are required at 30-foot (9 M) intervals. In addition, 60 by 60-inch (1,525 by 1,525 mm) level areas should be provided at any change in direction or at intersections with other ramps or walkways.

Straight-run Ramp

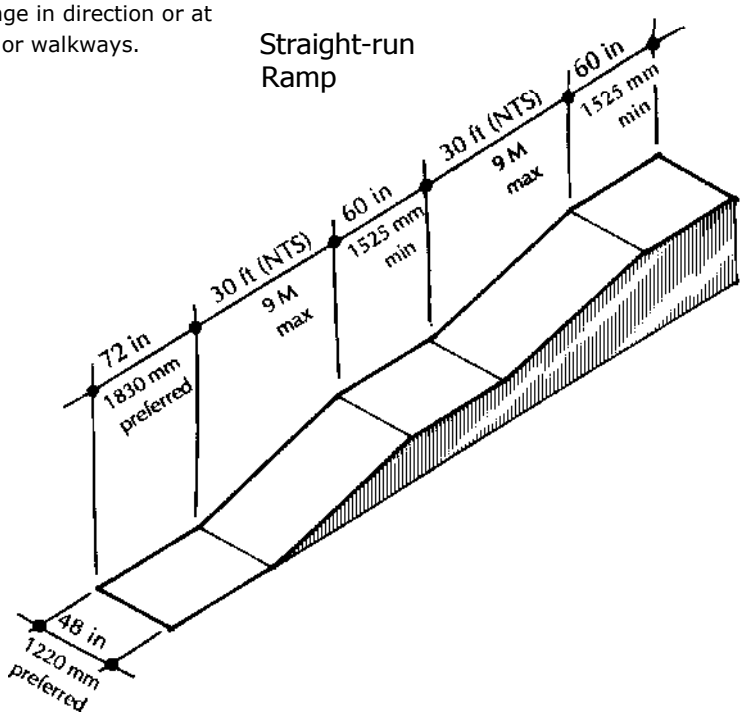

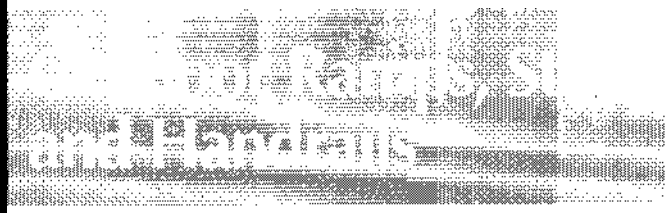

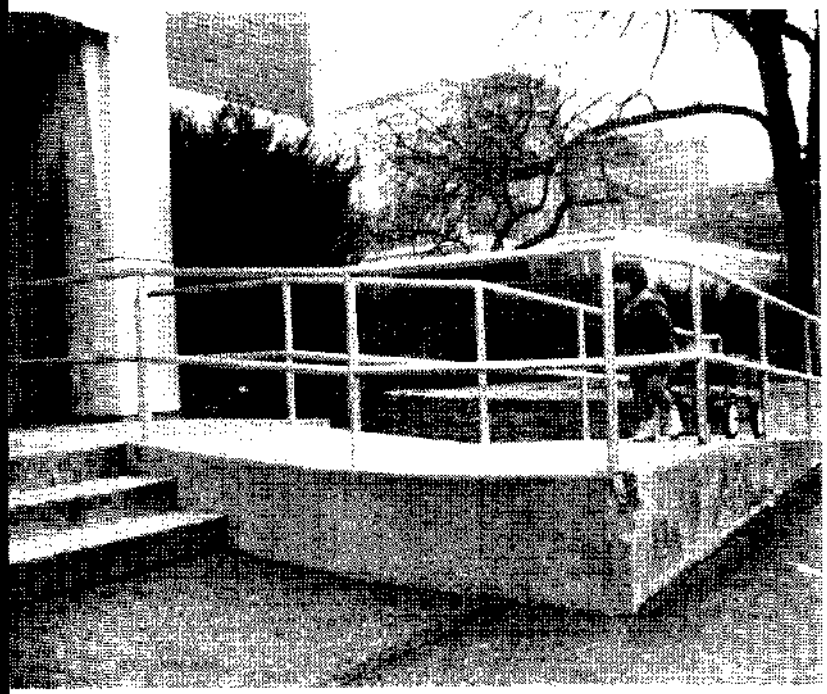

Provide 2-inch (50 mm) high curbs on both sides of a ramp surface for emergency wheel stops for wheelchairs and other small wheeled vehicles.

If the platform at the top or bottom of a ramp is used for access to a door which swings outward into the ramp, the platform should extend at least 24 inches (610 mm) past the latch side of the door. This design feature is important for persons using wheelchairs.

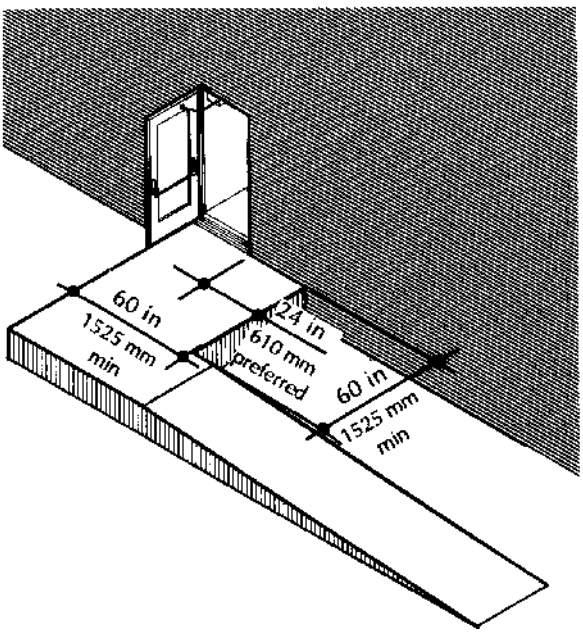

Outward-swinging Door to Access Ramp

All outdoor ramps and their associated landings and platforms should be protected from inclement weather to the extent possible within site and building design parameters established in any given project. Minimum recommended protection would include screening from winter winds and location that discourages the accumulation of snow, leaves and debris.

Plantings adjacent to ramps should not preventthe sun from melting ice and snow from walking surfaces nor should they prevent snow removal by mechanical equipment. In areas where ice and snow might accumulate, automatic melting systems are suggested.

Outdoor Stairs

Outdoor stairs fall into two general categories: stairs which are connected to building exit doorways and serve as a required means of egress from the building (this includes fire escapes); and stairs which are part of a site's walkway system, accommodating grade changes as required by the topography. The former category is thoroughly covered by the building code, which specifies necessary riser heights, tread depths, stair widths and handrails. For various building classifications the latter category is discussed in this section.

It is recommended that the width of site stairs should be no less than half the width of the walkway which they are serving. In no case should outdoor stairs have a clear width between cheekwal Is or handrails that is less than 36 inches (915 mm).

Exterior stairs should be constructed of firm, fixed, nonslip materials. Maximum recommended riser height is 7 inches (175 mm); minimum tread depth should be 11 inches (280 mm). Tread width, depth and riser height should not vary at any time between the bottom and top of a flight of steps.

To facilitate stair use by people with mobility impairments, tread/riser/nosing profiles such as those illustrated must be used. Open stair risers are not permitted by ADA.

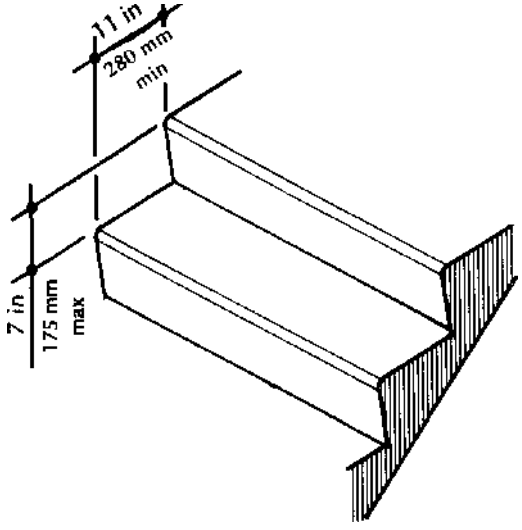

Recommended Tread and Riser

Examples of Acceptable Nosings

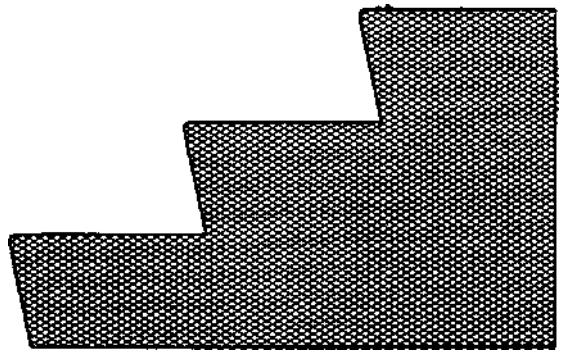

Sloped Risers - Preferred

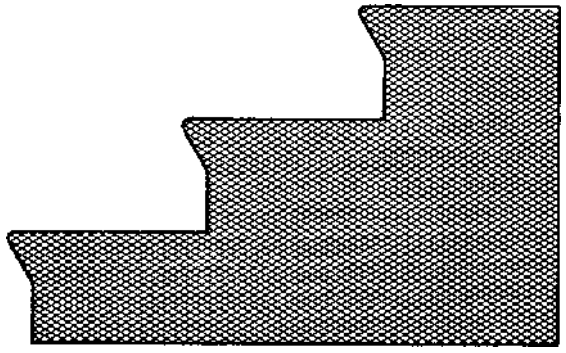

Rounded Nosings - Acceptable

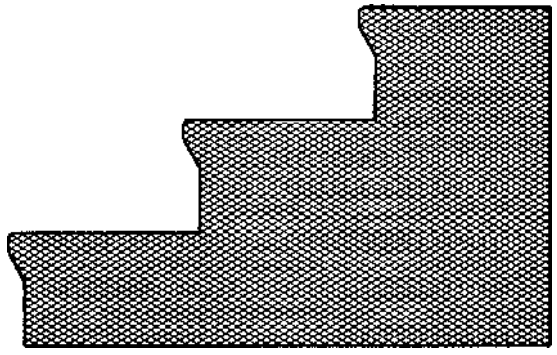

Bevelled Nosings - Acceptable

Outdoor Stairs and Handrails

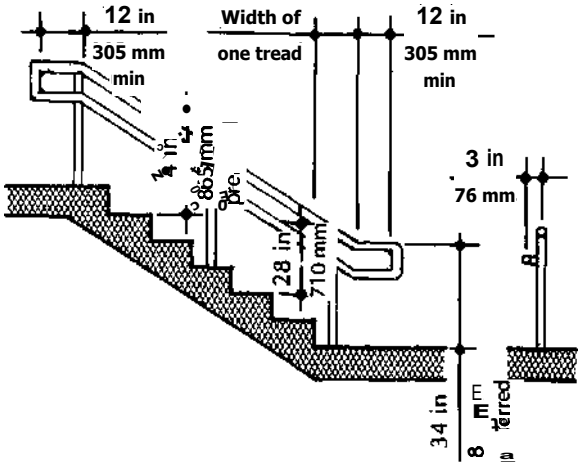

Outdoor Stair

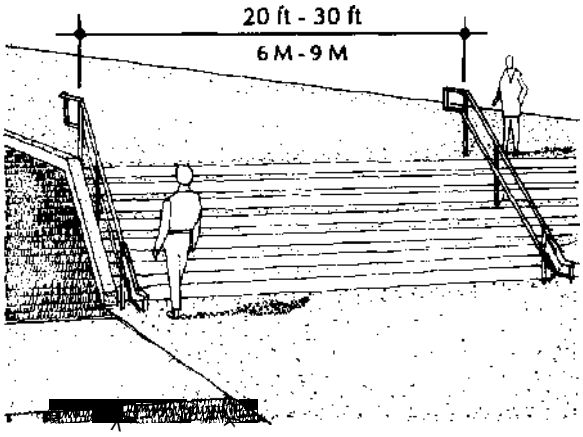

Stairs that are exceptionally wide should have handrails at 20- to 30-foot (6-9 meter) intervals.

It is recommended that the maximum rise between landings which are accessed by stairs be limited to 48 inches (1,220 mm) and the minimum number of risers between landings should be three.

A maintained lighting level of no less than 5 foot-candles (53.5 lux) is recommended at all stairs and landings. The lighting should be arranged so that the treads are not in shadow.

Outdoor stairs should have continuous handrails on both sides, where possible. The top of the handrail should be located between 34 and 38 inches (865 and 965 mm) above the line of the nosings. A height of 34 inches (865 mm) is recommended for handrails, as this meets both ADA and ANSI requirements. If handrails are not continuous, they should extend at least 12 inches (305 mm) beyond the top riser and at least 12 inches (305 mm) plus the width of one tread beyond the bottom riser. At the top, the extension should be parallel with the surface grade. At the bottom, the handrail should continue to slope for the distance of the width of one tread from the bottom riser; the remainder of the extension should be horizontal, unless such a projection presents a hazard to cross traffic.

Handrails

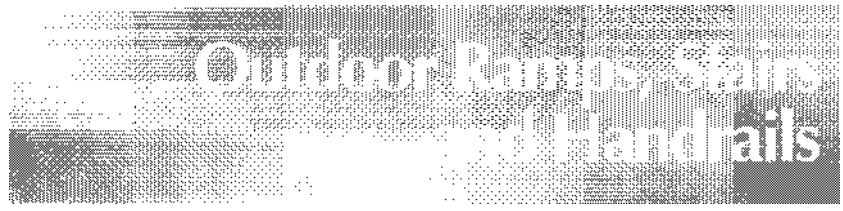

Handrails must be provided at outdoor ramps and stairs, as well as any locations where there is a drop of more than 6 inches (150 mm) to grade along the side of a walkway, rest area or other exterior walking space. Where the drop-off to grade is less than 6 inches (150 mm) but exceeds 2 inches (50 mm), some type of curb is recommended to serve as a wheelstop and a warning to people with visual impairments. Handrails are recommended at all points where some means of support or restraint may be required such as walkways, rest areas, or other locations where people walk, sit or stand.

The diameter or width of the gripping surfaces of a handrail should be 1-1/2 inches (38 mm), or else the shape should provide an equivalent gripping surface. If handrails are mounted adjacent to a wall, the space between the wall and rail should be 1-1/2 inches (38 mm) permitting the user ample room to grasp the rail. Handrails may be located in a recess if the recess is a maximum of 3 inches (76 mm) deep and extends at least 18 inches (455 mm) above the top of the rail. For additional handrail information, see "Handrails for Ramps" on page 91.

All railings must be firmly anchored. The system of mounting and anchoring railings and related structures should be designed to support 250 pounds (1,11 2 Newtons) applied to the top of the rail.

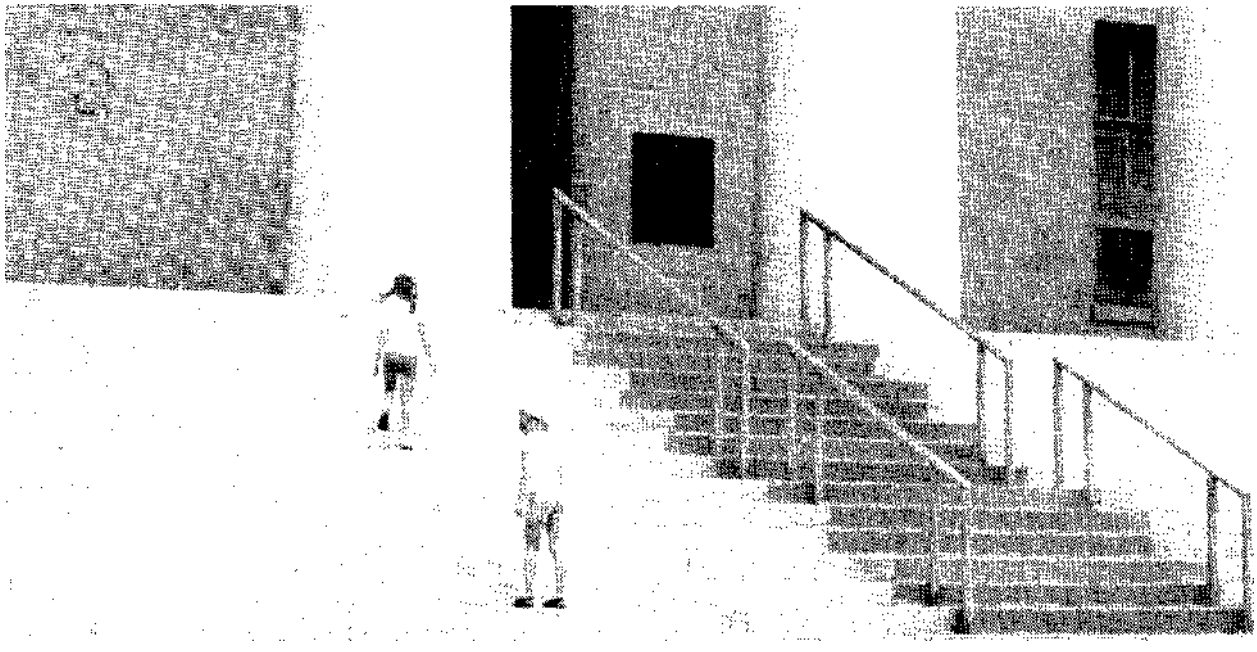

Gates

Where gates are used for control, privacy or security, care should be taken to ensure full use by all persons.

The ADA requires that a minimum clearance of 32 inches (815 mm) be provided at all gate openings to allow wheelchair passage. However, people using wheelchairs often approach gates from an angle and make a turn before entering because their wheels may be deflected by uneven surfaces. Therefore, it is recommended that a 36-inch (915 mm) gate be used at all locations. Recommendations for 36-inch (915 mm) gates made throughout this book should be understood to refer to a 36-inch gate (915 mm) which provides at least a 34-inch (865 mm) clear opening.

In addition, proper design of walkways leading to and from gateways will facilitate use of gates by persons in wheelchairs. Several design approaches with their critical dimensions are presented in the accompanying sketches.

Horizontal levers or handles are preferred to knobs for gate latch mechanisms, since most people can use this type of hardware. A recommended height for a lever or handle is between 30 and 32 inches (760 and 815 mm) above the walkway surface.

Gates that swing in both directions and are equipped with spring-operated, self-closing hinges are suggested in order to avoid problems with closing the gate after passage.

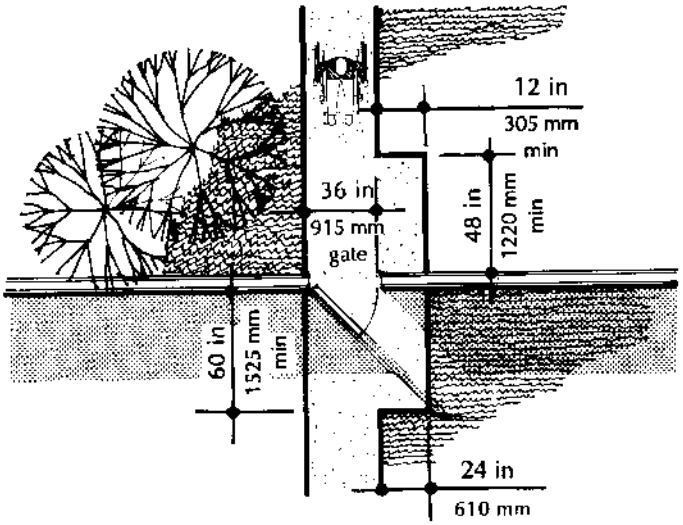

Continuous walk which is perpendicular to gate.

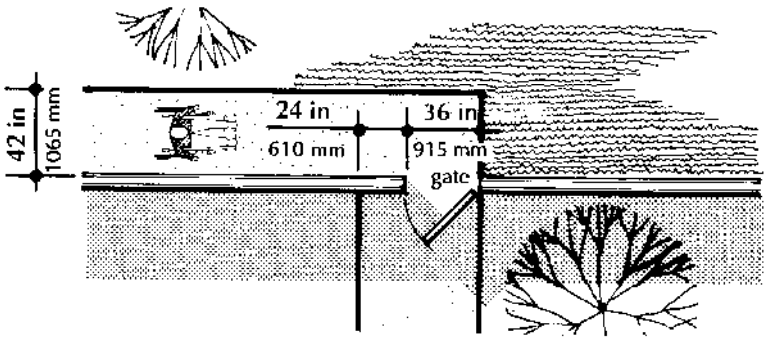

Walk with 90 degree turn at gate.

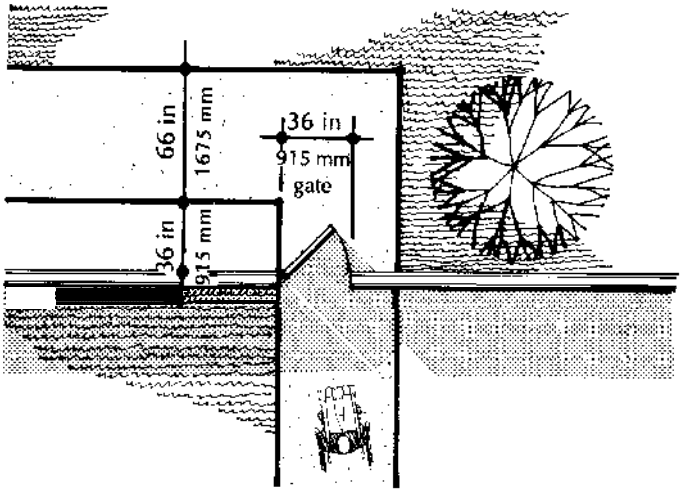

Walk with 90 degree turn before gate.

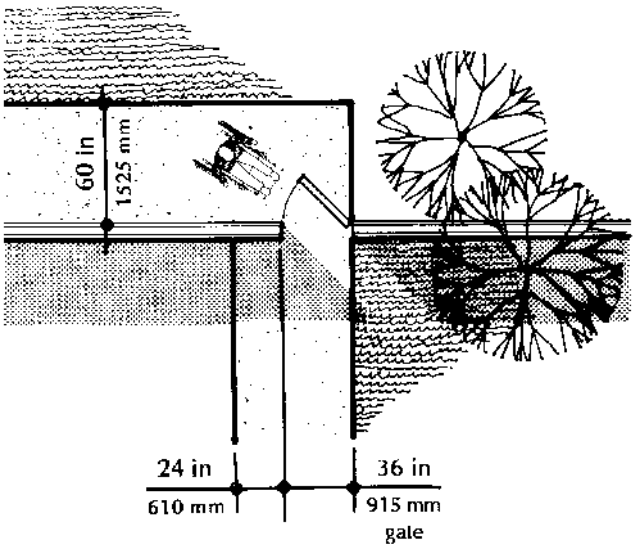

Walk with 90 degree turn at gate.

Vegetation

McGuire-Willis & Associates, Columbus, Ohio

Well-conceived planting design will enhance both the aesthetic and functional aspects of a site. While it is not within the scope of this publication to list aesthetic design criteria, common sense and adherence to a few guidelines will help avoid errors that might otherwise reduce site accessibility.

Outdoor Plant Materials

The following illustrations and accompanying text are excerpted from the "Vegetation Considerations" section of *Barrier-free Site Design.*[2]

1. Potentially dangerous plants such as those with large thorns or those with poisonous parts should not be placed adjacent to major walks where they may present a hazard.
2. Creeping ground covers, vines and other invasive materials can be both troublesome and harmful if not contained. They should be kept off buildings, walkways, ramps, steps, signs and lighting fixtures.
3. A clearance of 102 inches (2,600 mm) above walks, bikeways and sitting areas should be maintained to prevent eye or face injuries.
4. Overhead plant material which has a tendency to drop excessive debris, to droop, or to break under heavy snow loads or wind should be avoided.
5. Plant materials with shallow or surface root systems which are planted adjacent to walkways may cause the pavement to heave or break up, creating a hazard to walkway users.
6. Consideration of the shadow patterns which plants will cast when they are mature should be planned for prior to planting, ensuring that walkways receive maximum solar radiation to melt off snow and ice.

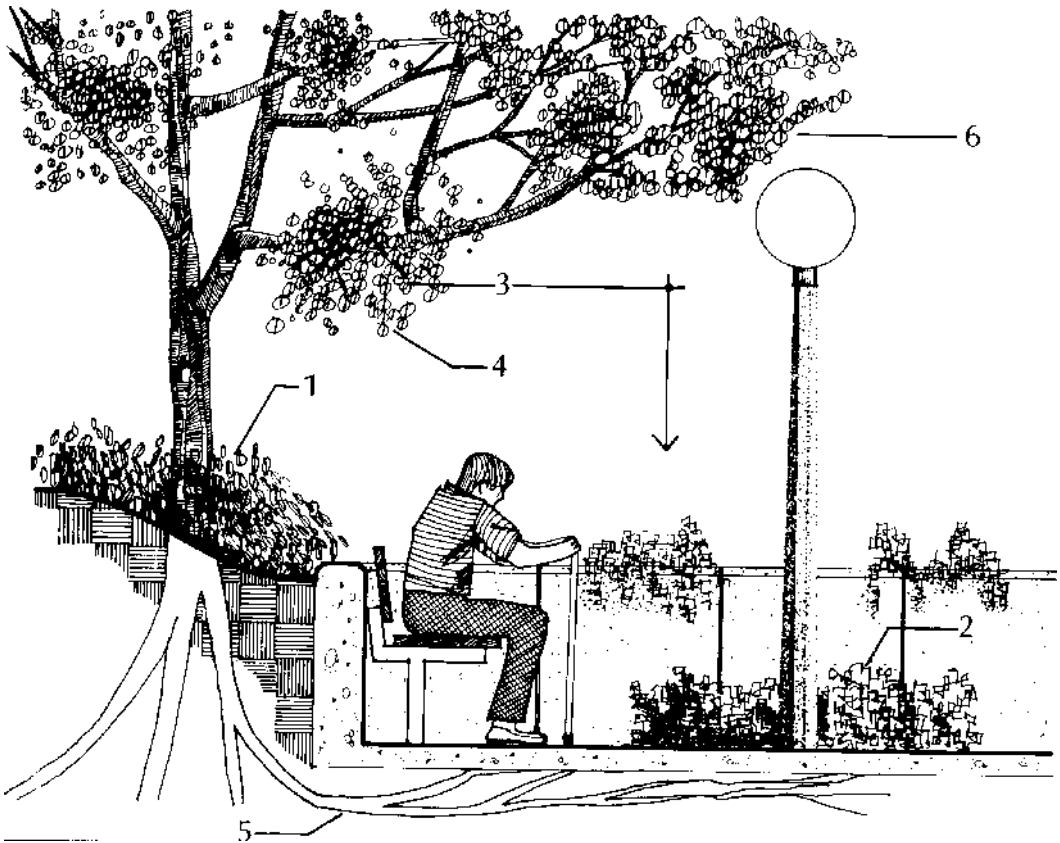

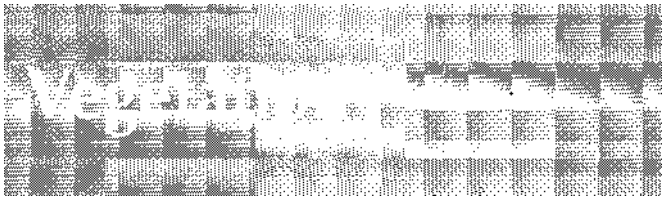

Plant Material Characteristics

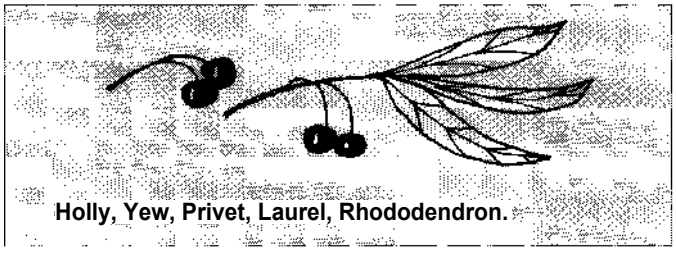

Holly, Yew, Privet, Laurel, Rhododendron.

Poisonous Plants: Children may be tempted to sample brightly-colored berries or leaves often found on these plant materials.

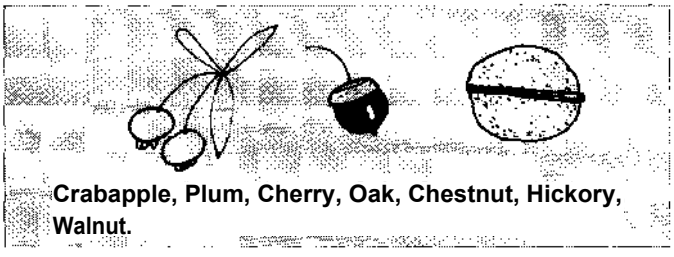

Crabapple, Plum, Cherry, Oak, Chestnut, Hickory, Walnut.

Fruits and Nuts: Long, strap-like pods, berries, cones and nuts can be slippery or difficult to walk on. They are easily tracked into buildings and can stain clothing.

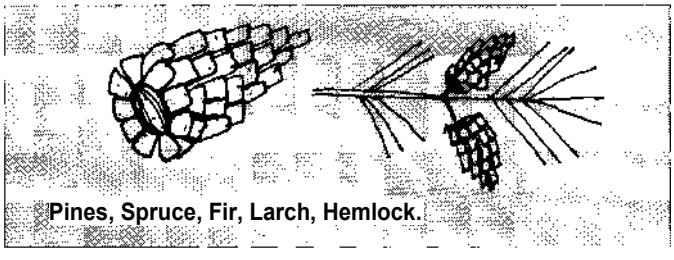

Pines, Spruce, Fir, Larch, Hemlock.

Cones: Cones can cause problems for pedestrians and small-wheeled vehicles when they fall on walk-way surfaces.

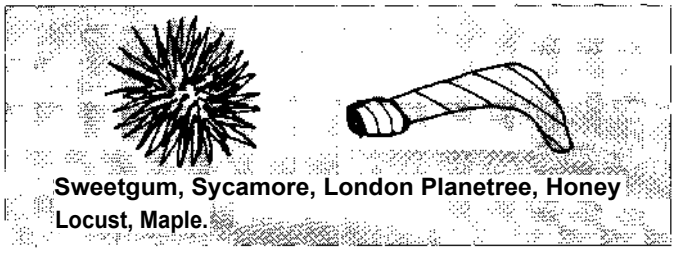

Sweetgum, Sycamore, London Planetree, Honey Locust, Maple.

Seed Pods: Seed pods create unsure footing for pedestrians and hinder the movements of small-wheeled vehicles.

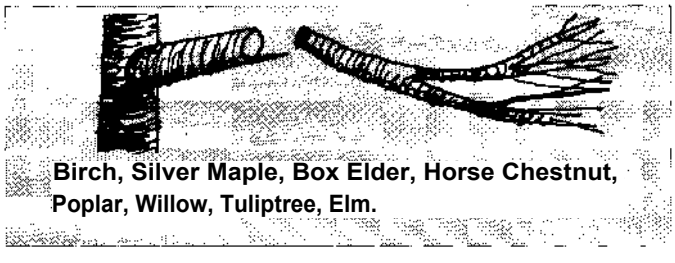

Birch, Silver Maple, Box Elder, Horse Chestnut, Poplar, Willow, Tuliptree, Elm.

Branch Breakage: Branch debris is difficult to walk on or push small-wheeled vehicles over. Large branches can cause extensive damage or injuries when they fall.

Vegetation

Drooping Branches: Branches can droop below minimum clearances on walkways or streets causing facial or eye injuries to pedestrians or hazards for motorists.

Birch, Willow, Pin Oak, Beech, Magnolia.

Shallow Roots: Surface root systems can cause walks to heave and break apart which in turn can cause pedestrians to trip and fall. Uneven or broken surfaces can be extremely difficult to push small-wheeled vehicles over.

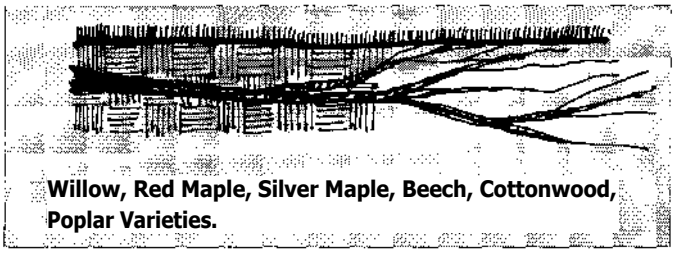

Willow, Red Maple, Silver Maple, Beech, Cottonwood, Poplar Varieties.

Odor: Foul-smelling odors detract from an area's aesthetic appeal.

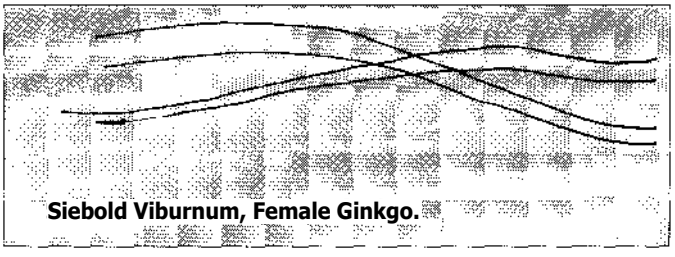

Siebold Viburnum, Female Ginkgo.

Thorns and Spikes: Plants with thorns or spikes can be extremely painful to brush against. Leaves, twigs or branches which fall to the ground are also hazardous for people who are barefooted or wearing light footwear.

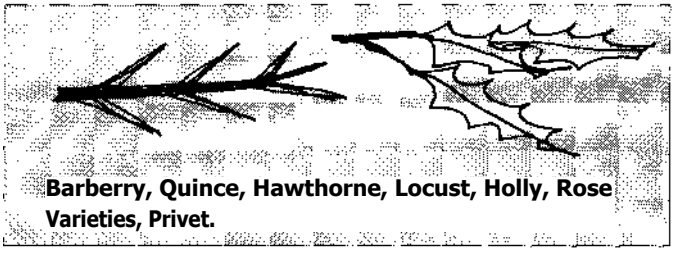

Barberry, Quince, Hawthorne, Locust, Holly, Rose Varieties, Privet.

Insects and Pests: Because of some people's possible severe reaction to insect bites and stings, plant materials which attract these pests are not recommended for areas adjacent to walks or sitting areas.

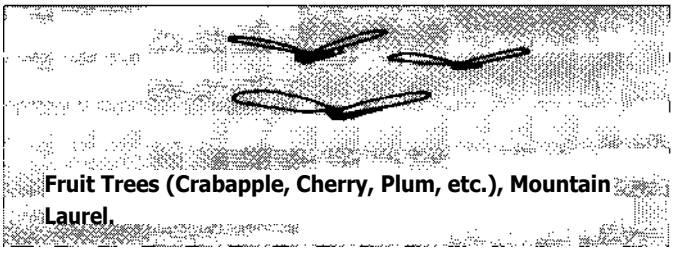

Fruit Trees (Crabapple, Cherry, Plum, etc.), Mountain Laurel.

Outdoor Furniture

Benches

Outdoor seating areas are recommended at all resting places, such as both ends of a ramp or along flights of stairs, building entrances and waiting areas. Benches may be located adjacent to paved walkways, but care should be taken to avoid placing them directly in major pedestrian traffic paths.

A seat height of 18 inches (455 mm) above the ground is usable by all. A seatdepth between 12 and 18 inches (305 and 455 mm) is generally acceptable. Allow 24 inches (610 mm) of bench length per person.

Backs and arm rests are desirable. In addition to increasing comfort, they provide support for many people.

All seating should be designed to accommodate 250 pounds (115 kg) per person. Materials used for outdoor seating should be durable. Materials that may create future maintenance problems by chipping or splintering should be avoided.

A clear space in front of benches which is 60 inches (1,525 mm) deep will accommodate wheelchair maneuvering. In addition, 36-inch (915 mm) open spaces between benches or at the ends of benches should be provided for wheelchairs or strollers.

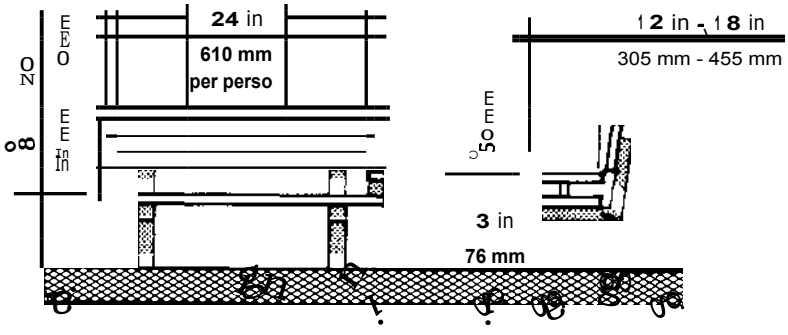

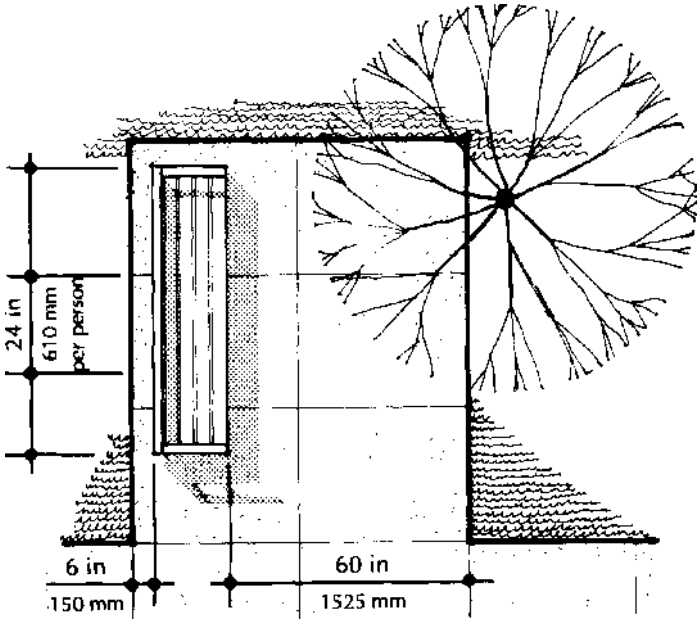

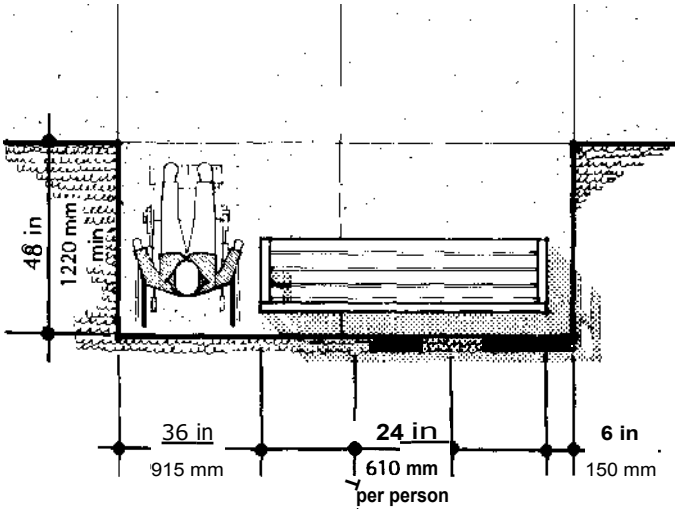

Tables

Outdoor tables should be set on firm, smooth and well-drained surfaces. To accommodate persons using wheelchairs, a clearance under table tops of 30 inches (760 mm) is recommended. For leg clearance, it is necessary to leave at least 18 inches (455 mm) from the outside edge of the table top to the nearesttable leg or support, and at least 34 inches (865 mm) lateral clearance. The lateral clearance may be provided at table ends, allowing full use of the table by all persons. Sharp corners and edges should be avoided. If the facility is visited by many people who use wheelchairs, it may be appropriate to provide a number of outdoor tables that allow individuals in wheelchairs to sit next to one another.

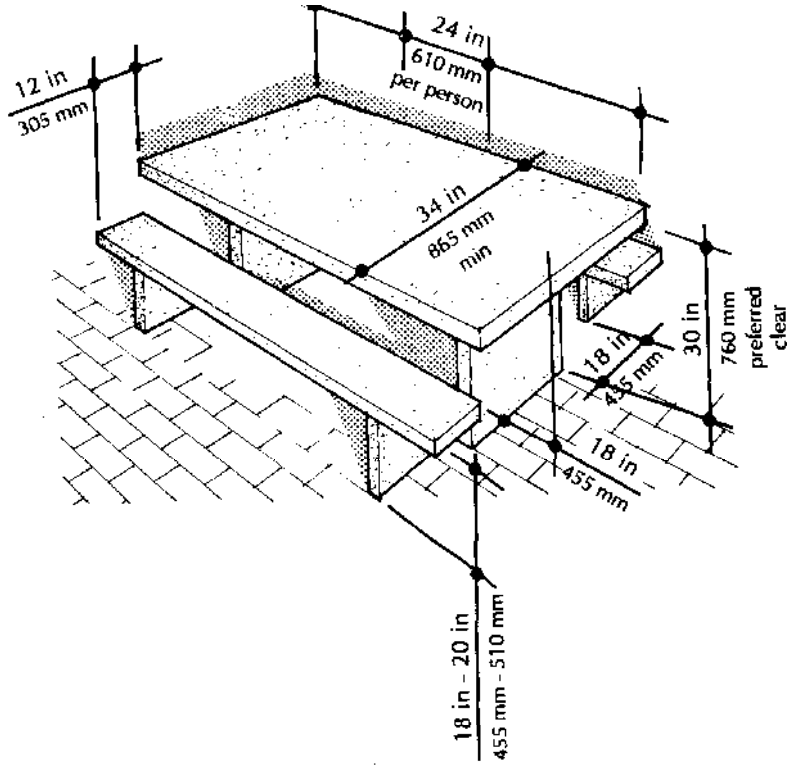

Trash Receptacles

Trash receptacles which can be used with a single arm motion and have rounded corners and dull edges should be utilized. To avoid hazards for individuals who are visually impaired, receptacles should be adjacent to but not obstruct walkways and paths. Covered receptacles should also allow trash to be disposed of with a single arm motion.

Site Lighting

Proper site lighting is important for everyone who enjoys outdoor spaces. Inadequate site lighting may contribute to insecurity, fear and feelings of uncertainty for people who are unfamiliar with an area. Well-conceived site lighting is essential for navigation by persons who have partial vision. All pedestrian or vehicular traffic areas should be adequately lighted, especially stairways, ramps and intersections.

Site lighting fixtures are available in several major categories. Low-level supplemental lighting is particularly important for highlighting ramps and stairs. This lighting should be arranged so that stair treads and risers are free from shadows. Low-level lighting must also be installed to avoid glare. Since the average eye level of a person in a wheelchair is about 44 inches (1,120 mm), low-level lighting should be mounted below this height.

All site lighting fixtures should be located alongside paths and walkways, out of the way of pedestrian traffic.

NOTE: Additional types of lighting are available for specialized applications.

The chart on the following page gives the IES Recommendated Site Lighting Levels.

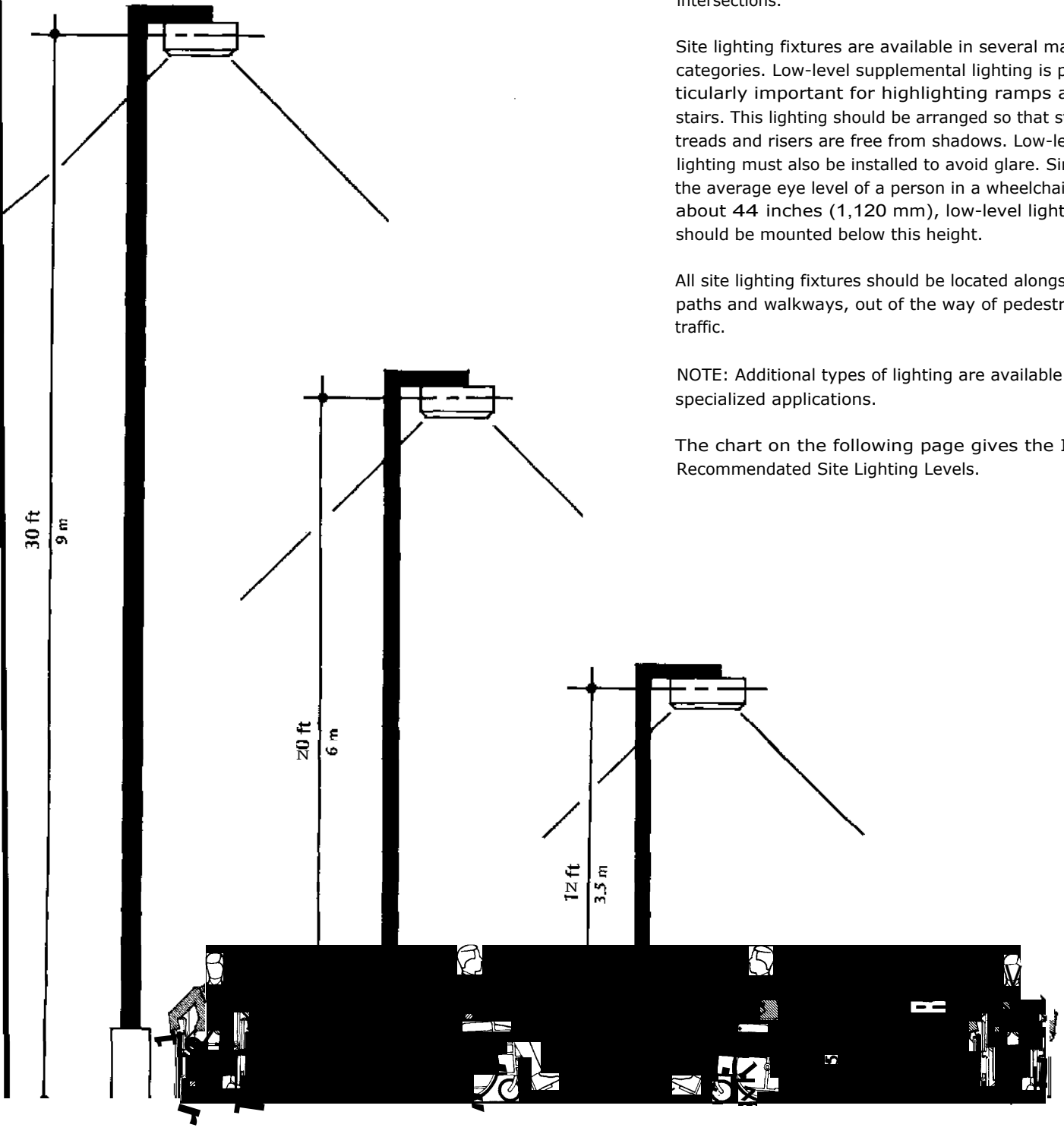

Parking and Roadway | Special Purpose | Walkway | Low Level

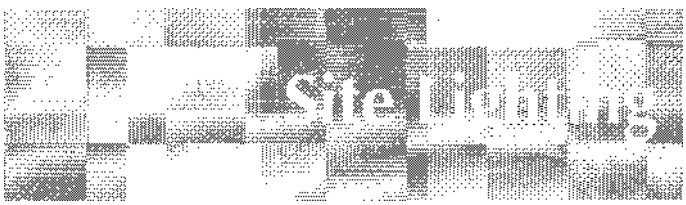

Illuminating Engineering Society Recommended Site Lighting Levels[1]

	COMMERCIAL	INTERMEDIATE[2]	RESIDENTIAL
PEDESTRIAN AREAS			
1. Sidewalks	1.0 footcandles[3] (10.0 lux)	0.6 footcandles (6.0 lux)	0.2 footcandles (2.0 lux)
2. Pedestrian Ways	2.2 footcandles[4] (22.0 lux)	1.1 footcandles (11.0 lux)	0.5 footcandles (5.0 lux)

[3] *Values are given in minimum average maintained horizontal footcandles for roadside sidewalks.*
[4] *Values are given in average vertical levels for pedestrian identification at a distance.*

ROADWAYS			
1. Freeways	0.6 footcandles[5] (6.0 lux)	0.6 footcandles (6.0 lux)	0.6 footcandles (0.6 lux)
2. Expressways	1.0 footcandles[5] (10.0 lux)	0.8 footcandles (8.0 lux)	0.6 footcandles (6.0 lux)
3. Maj. Expressways	1.2 footcandles[5] (12.0 lux)	0.9 footcandles (9.0 lux)	0.6 footcandles (6.0 lux)
4. Collectors	0.8 footcandles[5] (8.0 lux)	0.6 footcandles (6.0 lux)	0.6 footcandles (6.0 lux)
5. Local	0.9 footcandles[6] (9.0 lux)	0.7 footcandles (7.0 lux)	0.4 footcandles (4.0 lux)

[5] *Values are given in average horizontal uncontained footcandles for high mast lighting.*
[6] *Values are in average maintained footcandles for mounting heights - 20 meters and lower over asphalt road surfaces.*

HIGH ACTIVITY OPEN PARKING FACILITIES		
1. General Parking & Pedestrian Areas	0.9 footcandles[7]	(10.0 lux)
2. Vehicle Use Only Areas	2.0 footcandles[8]	(22.0 lux)

[7] *Minimum on pavement.*
[8] *Average on pavement.*

BUILDINGS		
1. Entrance, Active Areas	5.0 footcandles	(50.0 lux)
2. Building Surrounds	1.0 footcandles	(10.0 lux)

[1] *SOURCE: IES Lighting Handbook, 4th Edition, Illuminating Engineer's Society, New York City, New York.*
[2] *Includes by definition industrial buildings.*

ENDNOTES

1. *ADA Accessibility Guidelines for Buildings and Facilities,* Section 4.1.2 (5), page 6.

2. U. S. Department of Housing and Urban Development, Office of Policy Development and Research. *Barrier-free Site Design,* Researched by the American Society of Landscape Architects Foundation (Washington DC: 1977).

Architectural Design Features

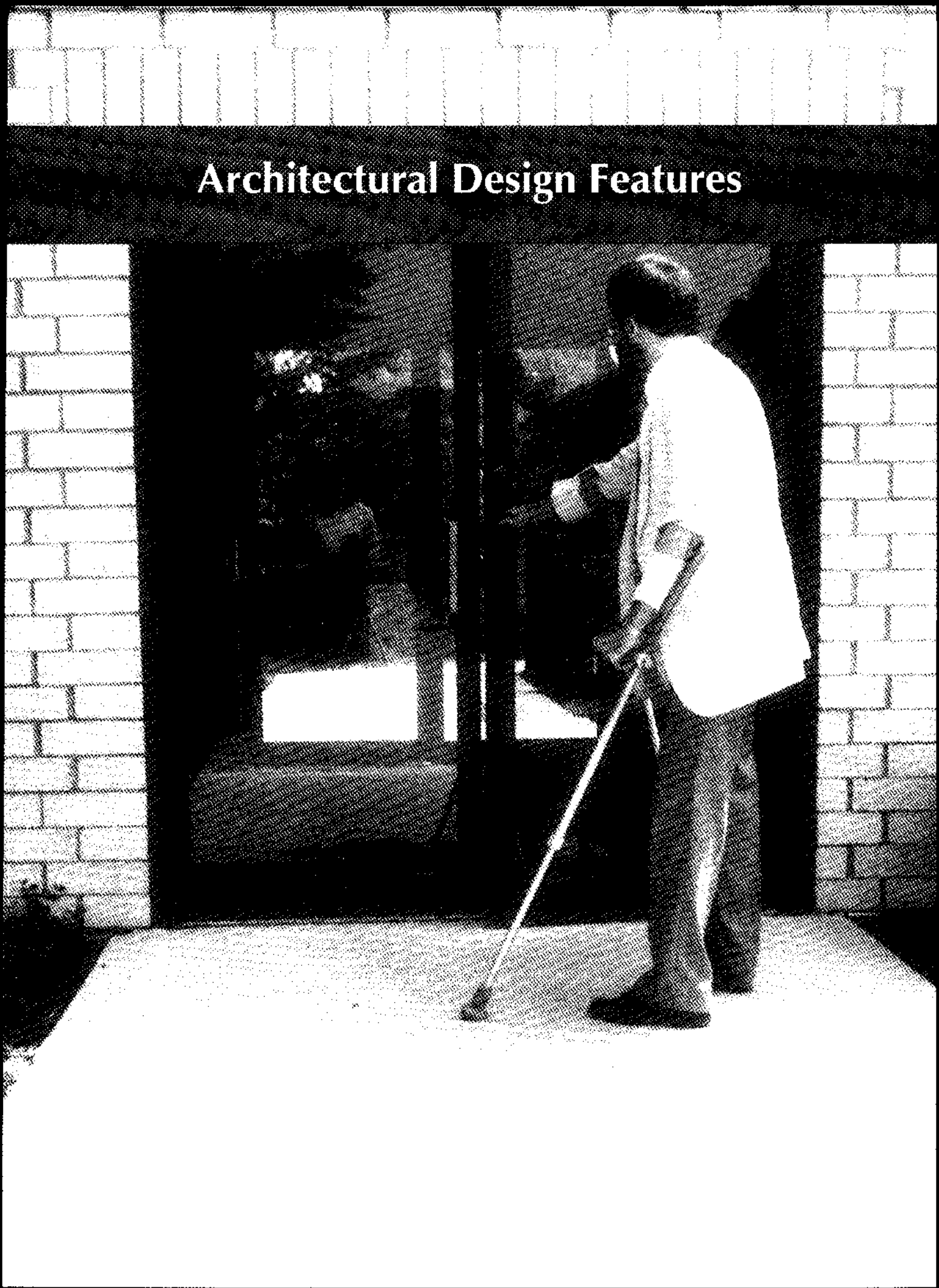

Architectural Design Features

The design of an accessible building is a creative and challenging process. This chapter presents a series of guidelines for making a number of common architectural elements accessible. These elements should not be designed in isolation of one another, however. Barrier-free buildings must be designed holistically. Great amounts of money and energy expended on a restroom will be wasted if there is no accessible entrance to the building.

Barrier-free buildings must also have barrier-free details. A door which provides adequate clear opening and maneuvering space can still be a barrier if its hardware is inaccessible.

Finally, barrier-free buildings must be accessible to people with a variety of limitations. Not all people with disabilities use wheelchairs. Some people who use a building may have visual or hearing impairments, some may be on crutches and many will simply be older and lack the energy and flexibility of younger people.

The complex task of designing an accessible building can be brought into perspective if two basic concepts are kept in mind: that people with disabilities should not be denied participation in any activity because of their disability; and that they should be allowed to participate in the most integrated setting possible.

The recommendations made in this chapter are intended for new construction projects. Although they provide an ideal goal for renovation projects as well, the unique problems of making renovations accessible are covered in greater detail in the chapter, "Renovation and Rehabilitation," beginning on page 200.

Building Entrances

All major building entrances, particularly those most easily reached from parking areas, drop-off zones and public transportation stops should be fully accessible for all persons. Such entrances should directly access the main lobby and circulation pattern of the building, facilitating use of elevators, rest rooms, telephones and drinking fountains. If level changes occur between the entrance door and other public areas of the building, they should be ramped in accordance with recommendations in the section, "Interior Stairs, Ramps and Handrails," beginning on page 90.

Weather protection such as canopies and overhangs is recommended for major building entrances. Care should be exercised to see that canopies and overhangs allow adequate vehicular clearance.

When turnstiles, revolving doors or other pedestrian traffic control devices are used, alternate building entrances for persons who use wheelchairs or walking aids must be provided. Such access should be clearly defined and should not require traffic disruption or attendant assistance.

Power-actuated doors are highly recommended for major building entrances. Power doors benefit not only people with physical disabilities, but also people accompanied by children, carrying packages, or individuals pushing strollers or shopping carts. Sliding power doors are preferable to the swinging type.

Power or power-assisted doors should require no more than 15 pounds (66.6 Newtons) to stop their movement, and should conform with door opening force requirements for manually-operated doors. When swinging power doors are used, they should swing in the direction of egress in the event of a power failure or breakdown.

For further information on automatic doors, see "Doors and Doorways," which follows.

Doors and Doorways

A minimum clear opening of 32 inches (815 mm) is required by ADA at all doorways. The clear opening is measured between the face of the door and the opposite stop with the door open at 90 degrees. Allowing for hardware and at least 3/4 inch (19 mm) door thickness, a 34-inch (865 mm) door would be required to achieve this clear opening. Swinging doors wider than 48 inches (1,220 mm) are not recommended as these will be difficult for a person with a disability to operate.

While it is possible for a wheelchair to pass through an opening even narrower than 32 inches (815 mm) on a straight approach, people using wheelchairs must often approach a door from an angle and make a turn before entering, or their wheels may be deflected by an uneven floor surface. Any of these circumstances can make entry through a narrow opening difficult, if not impossible. Thus, it is recommended that a 36-inch (915 mm) door be used at all locations. Recommendations for 36-inch (915 mm) doors made throughout this book should be understood to refer to a 36-inch door (915 mm) which provides at least a 34-inch (865 mm) clear opening.

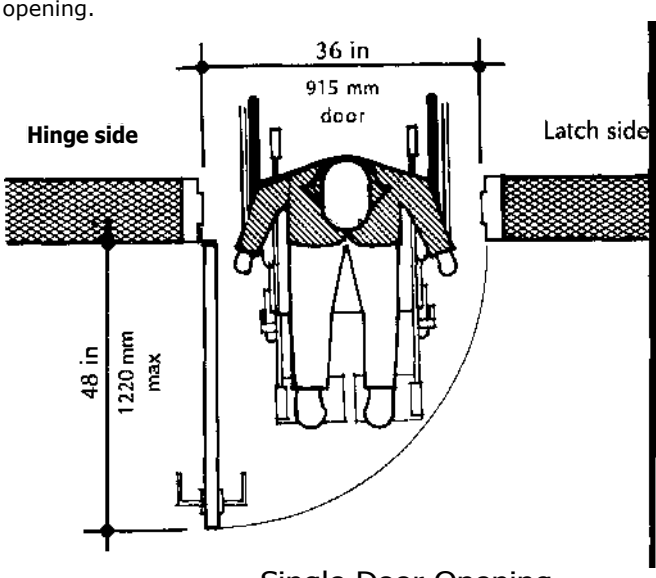

Single Door Opening

Proper doorway design is important to all persons with disabilities, especially those using wheelchairs, crutches or walking aids. All interior doorways must be accessible to allow people with disabilities adequate use of building facilities.

The International Symbol of Access shown in Appendix IV should clearly identify all accessible entrances.

Where a building entrance has two or more openings, the ADA minimum clear opening width of each opening is 32 inches (815 mm). For doorways with more than one independently-operated door (leaf), at least one leaf must provide the minimum clear opening. Again, it is recommended that each door or leaf be 36 inches (915 mm) wide, and provide a clear opening of at least 34 inches (865 mm).

A short hallway or vestibule located between two sets of doors may be desirable for security or energy conservation, but such a space can entrap a person using a wheelchair or walker, or a person accompanied by a dog guide. A minimum clearance of 48 inches (1,220 mm) in **addition** to the width of the door swinging into the space should be provided between the sets of doors to prevent such entrapment.

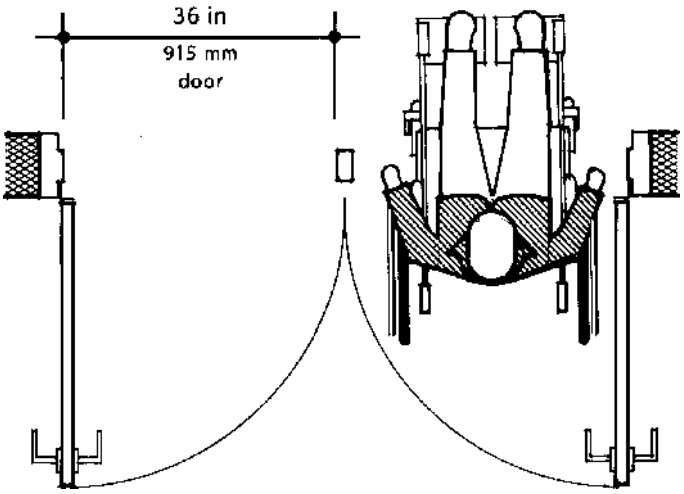

Pair of Doors with Center Mullion

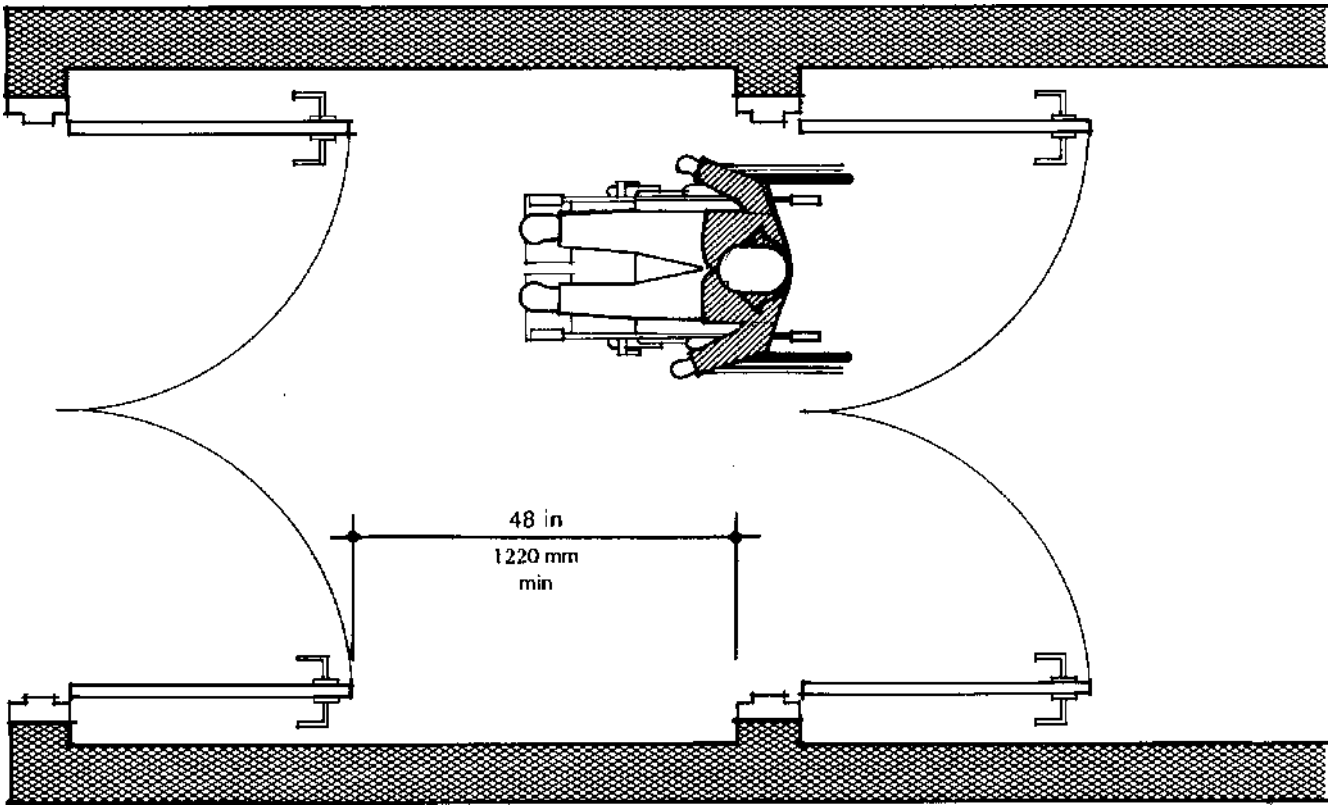

Vestibule between Doors

Where a front approach is possible, the floor should be level for at least 60 inches (1,525 mm) beyond the door on the pull side, and 48 inches (1,220 mm) on the push side. A clear space of 24 inches (610 mm) on the latch side of the door is recommended on the pull side of a door to allow persons using assistive devices to position themselves clear of the door swing.

If the door has both a closer and a latch, a minimum clear space of at least 12 inches (305 mm) should be provided on the push side of the door to allow persons using wheelchairs to pull themselves closer to the latching device. This space also permits ambulatory persons to center themselves on the latch and makes it easier for all persons to see and operate the latch. Clearances for both front and side approaches are illustrated in the diagram below.

Maneuvering Clearances

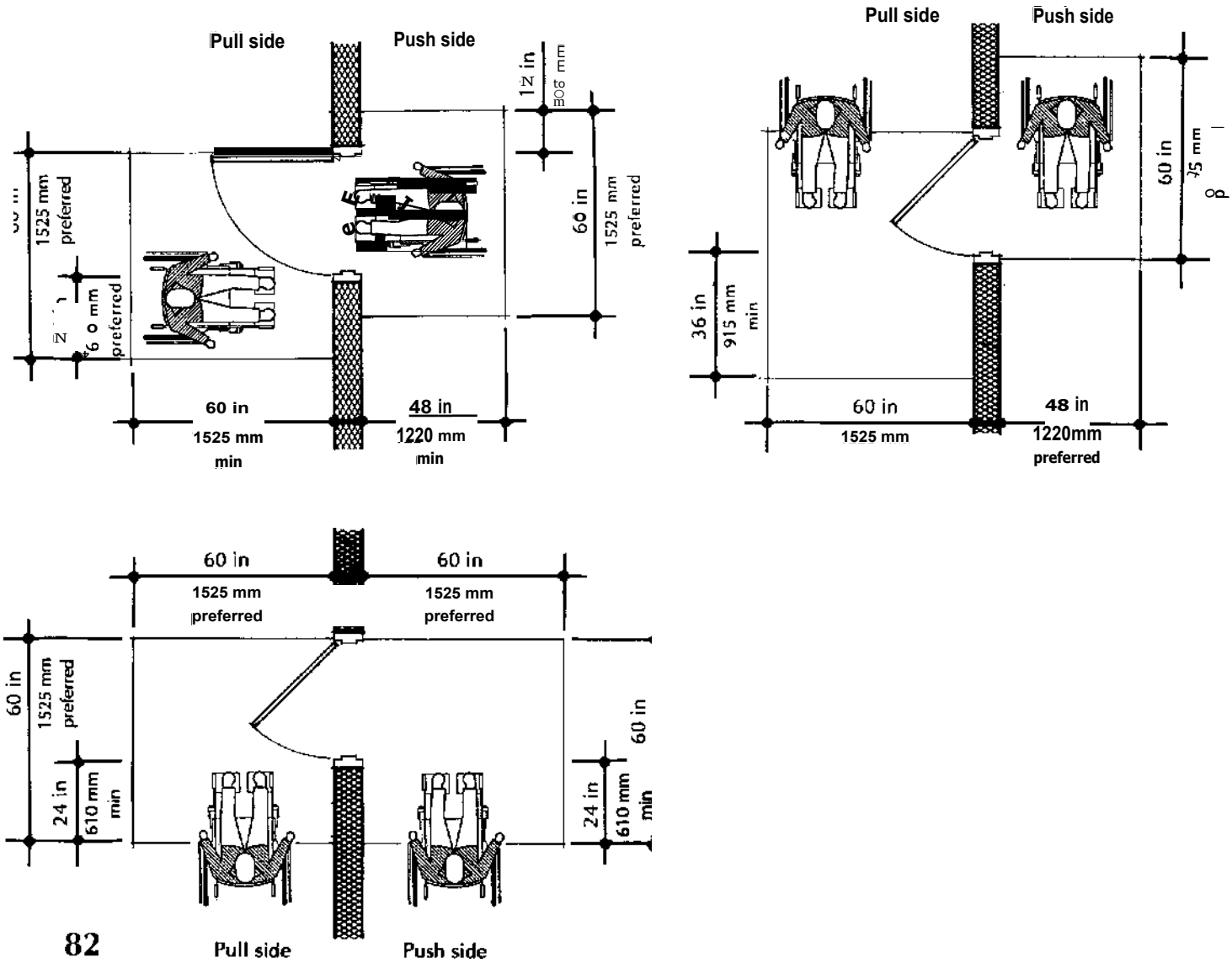

Raised thresholds should be avoided whenever possible, but limited to 1/2 inch (13 mm) when unavoidable. All thresholds should be beveled front and rear. It is recommended that sliding door guides or rails across door openings not project above the floor surface.

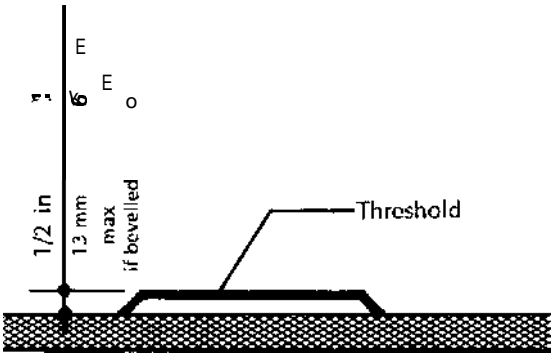

Kick plates on doors should extend to at least 12 inches (305 mm) above the floor level and be made of a durable material. Where primary use is by persons using wheelchairs, a 16-inch (405 mm) kick plate is recommended.

A change in floor texture at doorways, from carpet to tile for example, can help signal a doorway approach for persons who have visual impairments. All floor surfaces and changes in floor surfaces should follow the guidelines described for accessible routes, which start on page 86.

Manual sliding doors are not any easier for persons who have mobility impairments to operate than manual swinging doors; in some cases they may actually be more difficult. These types of doors are recommended only where space is restricted and a hinged door would impede access or wheelchair circulation.

Glazing doors (fitting them with glass panels) allows people with disabilities to see and be seen when approaching a door. This accommodation is especially important for people with hearing impairments, but it increases safety for everyone. The lower edge of door glazing should be no higher than 36 inches (915 mm) above the floor to accommodate the eye level of persons in wheelchairs. The glass should extend no lower than 12 to 16 inches (305 to 405 mm) above the floor so that a kick plate may be installed. Doors with large areas of glass should be marked for safety.

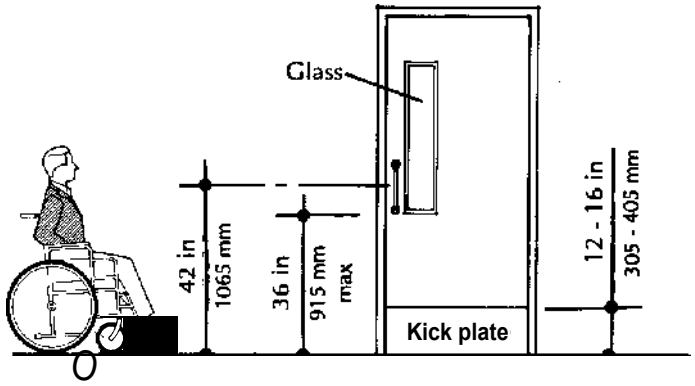

Minimum Glazing

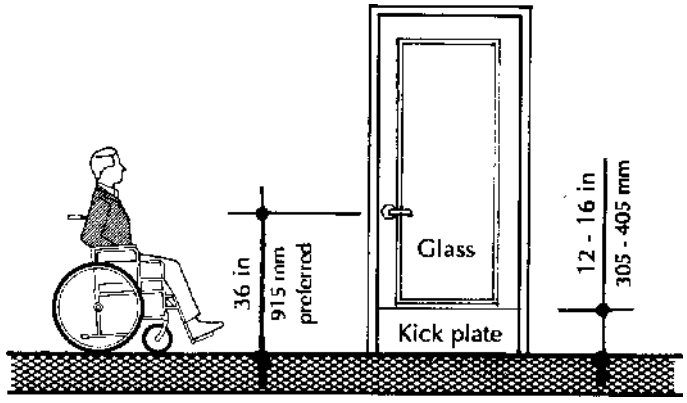

Maximum Glazing

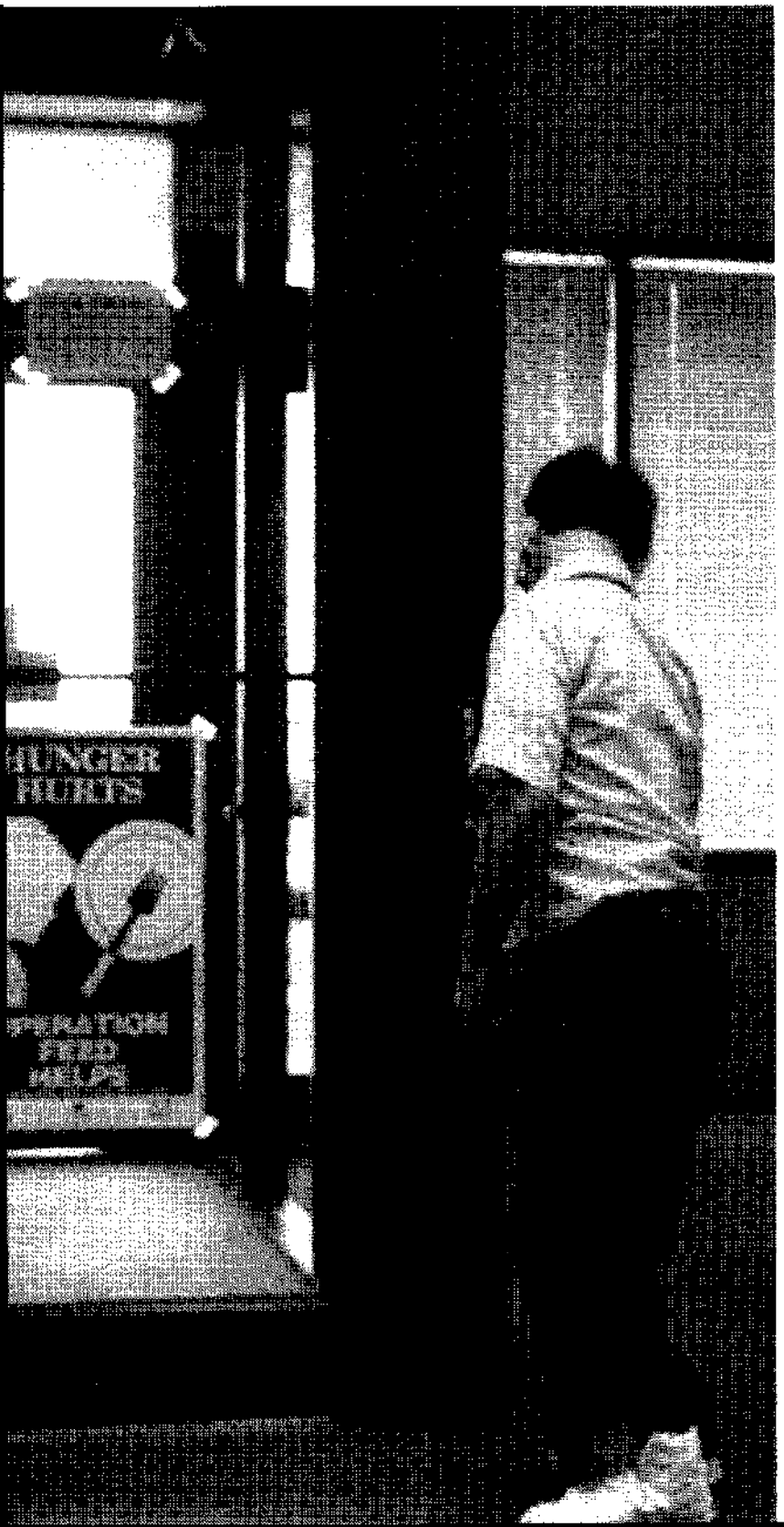

Opening Force and Closing Pressure

According to ADA, the maximum force required to open any interior door may not exceed 5 pounds (22.2 Newtons). Doors with automatic closing devices should have pressure adjustment provisions. A closing pressure on exterior doors of 5 pounds (22.2 N) or less is recommended. Closing devices on interior doors which require 2 pounds (8.9 N) or less operating force are preferred. A 4- to 6-second time delay is recommended for self-closing doors.

Automatic fire doors which are held open by magnetic catches (except during a fire emergency) are preferred to continuous self-closing fire doors except where prohibited by life-safety code.

Wind speed and air pressure differentials affect the opening pressure of doors. If wind is likely to exceed 15 MPH (25 KMPH) more than ten percent of the time, wind breaks, special design configurations or power-actuated doors are indicated.

Air curtain entrances rely on air blown at a high velocity down over the entry. This stream or "curtain" of air prevents outside air from leaking to the inside of the building. Air curtains can be used in lieu of vestibules or they can replace exterior doors entirely. Such entrances are easy for everyone to use and eliminate problems of door hardware and opening force. Air curtains also have advantages in high traffic applications. The main drawback of such entrances is that they require a large amount of energy to operate, and if the air velocity is not controlled carefully, they can be highly inefficient. As a result, air curtain entrances are not used frequently today.

Recommended door types in order of preference for use by people with disabilities are:

1) air curtain entrances
2) power actuated doors (sliding-type preferred)
3) balanced doors
4) hinged or pivoted leaf doors

The maximum allowable force required to close any of the above doors may not exceed 5 pounds (22.2 N).

Hardware

Lever-type hardware, push plates, and panic bars centered at 36 inches (915 mm) above floor level are preferred to other types of hardware on all latched doors. These types of hardware allow doors to be opened by persons with limited hand functions who can utilize elbows, wrists or forearms. Vertical, protruding pull handles centered at 42 inches (1,065 mm) above the floor are preferred to horizontal pull handles. Deadbolt locks that can be opened from the inside by turning the lever handle are recommended for ease of use, especially in an emergency.

Lever handles, panic bars, pull handles and similar door opening hardware should be knurled ***only*** at doors leading to hazardous or dangerous areas. Knurling, which is a textured surface treatment, is a signal for persons with visual impairments to proceed no further.

Key card or computerized entry systems are acceptable only if all operational devices are mounted within required reach guidelines and can be operated by people with limited hand functions. Time delays which allow at least 10 seconds for entry are recommended on such systems.

ADA requires that all necessary door hardware be mounted no higher than 48 inches (1,220 mm) above the finished floor.

Lever Type

Vertical Pull

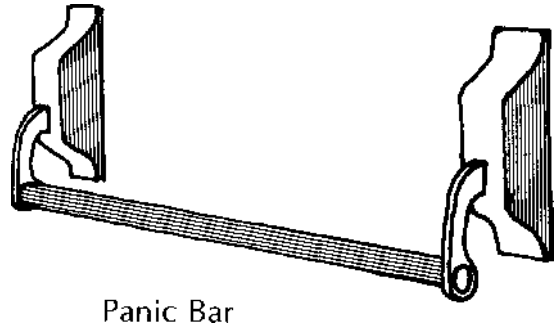

Panic Bar

Accessible Routes

An accessible route refers to the path by which various areas of the building may be reached. ADA requires that at least one accessible route connect all accessible building entrances with all accessible spaces and elements within a facility. Of primary importance is access to public areas and the primary functions of the building. An accessible route can include walks, halls, corridors, aisles, sky walks, tunnels or other circulation spaces.

Technically, the accessible route would also include all vertical circulation elements within a building such as ramps, stairs and elevators. These specialized elements will be covered later in this chapter, while this section deals primarily with horizontal circulation elements such as corridors and exit ways.

The minimum clear width for corridors and exit door openings is generally regulated by local life safety codes. These minimums should always be met or exceeded. Although ADA permits corridors and exit ways that are part of an accessible route to have a smaller width, it is recommended that such paths have a clear width of not less than 42 inches (1,065 mm). The preferred width is 60 to 72 inches (1,525 to 1,830 mm), which allows two wheelchairs to pass. If corridors are less than 60 inches (1,525 mm) wide, open areas at least 60 inches (1,525 mm) square must be provided at strategic points — no less than 200 feet (61 M) apart — to allow wheelchair passage and turning.

Doors which open into corridors should not reduce the corridor width beyond the minimum guidelines above. For additional information, see the section, "Doors and Doorways," beginning on page 80.

Floor Surfaces

A uniform floor level should be maintained along accessible routes. Where this is not possible, properly-designed ramps may connect various levels. Access panels, grates and other obstructions should not be placed in the floors of accessible routes or exit ways unless absolutely necessary. Grid openings on grates must be no larger than 1/2 inch (13 mm) in the dominant direction of travel. It is recommended that grid openings be kept smaller than 1/2 inch (13 mm) in both directions. Larger openings can be hazardous to persons who use crutches or canes and can make wheelchair travel difficult.

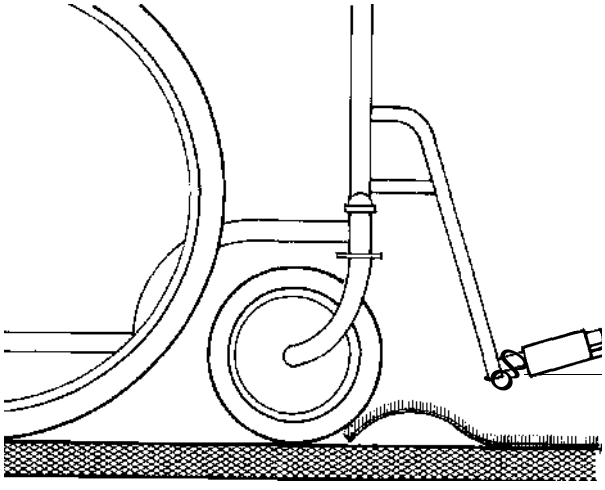

Thick Mats

Non-slip, hard-surface materials which permit easy wheelchair movement should be used on major circulation paths within buildings. Flooring materials should provide a firm, even, non-slip surface, even when wet.

When carpeting is used as a flooring surface, tightly woven with a heavy duty loop (not cut) pile is recommended, and sculpted patterns should be avoided. Pile height should not exceed 1/2 inch (13 mm) and the grain of the pile should run in one direction. Carpeting should be installed without a pad and should be glued to the floor.

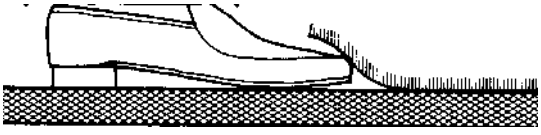

Loose Mats

Loose mats or area rugs should not become architectural barriers. Where door mats or rugs are to be used, they should project no more than 1/2 inch (13 mm) above adjacent floor surfaces, unless the edges are beveled. All floor coverings should be securely fastened down at the edges. Loose mats and area rugs are hazardous for elderly persons, persons using canes, walkers or leg braces, and people with visual impairments. Thick, bristly floor coverings tend to bunch up under the wheels of wheelchairs, baby strollers and similar vehicles. Rubber mats less than 1/4 inch (6.5 mm) thick are recommended.

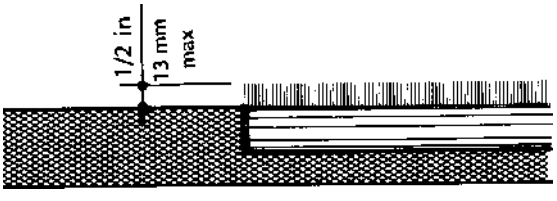

Carpet Pile Depth

Strongly contrasting colors and patterns should be avoided because they may create the appearance of a variation in floor height, which can cause confusion. However, changing flooring materials from carpeting to a hard surface at certain critical areas such as doorways or path intersections can enable people with visual impairments to orient themselves and warn them of the approach of another person.

Minimum Height and Protruding Objects

ADA provides very specific guidelines for protruding objects along accessible routes. These guidelines are illustrated below. However, it is strongly recommended that protruding signs and fixtures be avoided whenever possible, especially if the accessible route is used as a means of emergency egress. The accessible route should also be kept clear of free standing objects such as trash cans, ashtrays and signs, as these can become hazardous to people with visual impairments.

A minimum clear height of 84 inches (2,130 mm) which is free of hanging or protruding signs, lights or other fixtures is recommended for corridors. ADA and some local building codes allow a lower ceiling level.

It is recommended that travel distance over carpeted areas to reach hard surface areas not exceed 50 feet (15 M). Metal or resilient transition strips between carpet and another flooring material should be no more than 1/4 inch (6.5 mm) high, unless transitional areas are bevelled as illustrated below.

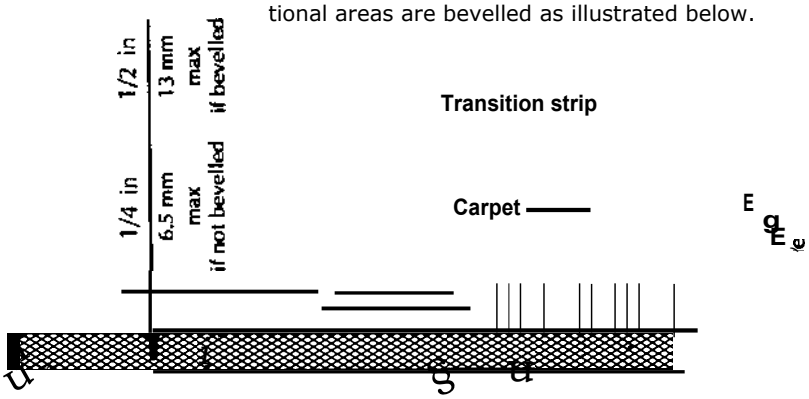

Flooring Transition Material

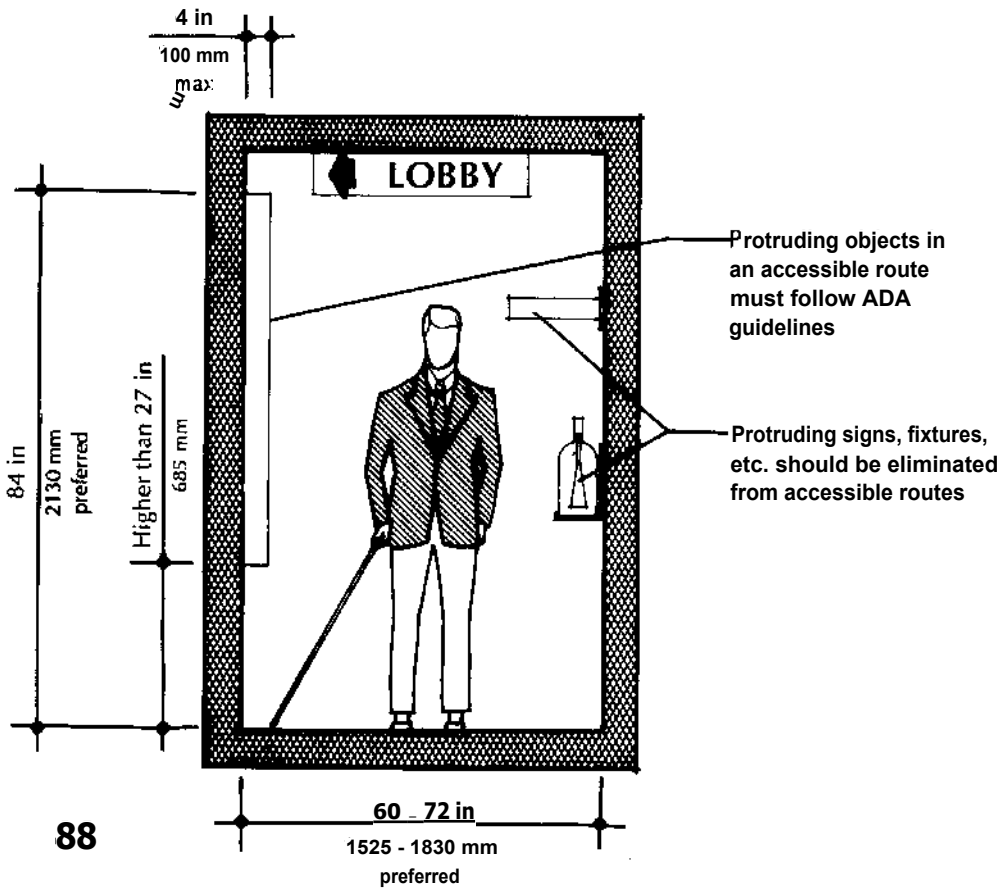

Corridor Clearances

Areas of Rescue Assistance

Enclosed, protected spaces where people who use wheelchairs and others with mobility impairments can await assistance from emergency personnel in the event of a fire or other building emergency should be provided. Although the requirement for areas of rescue assistance is new with ADA, the concept is similar to that of refuge areas in high rise buildings. The ADA Accessibility Guidelines provide a thorough description of the requirements, which are summarized as follows.

Rescue assistance areas are required in buildings which do not have a supervised automatic sprinkler system. Such areas must be provided in these buildings wherever the means of egress from a floor is not accessible. Elevators, though an accessible means of travel between floors, cannot be considered a means of egress in an emergency situation.

The rescue assistance area must provide two wheelchair spaces; each space must measure at least 30 by 48 inches (760 by 1,220 mm), and must not encroach on any required egress width. A two-way communications system with audible and visual signals must be provided for each rescue assistance area, and each area must be clearly identified with appropriate signage. The enclosure of a rescue assistance area should conform to the ADA guidelines or the local building code, whichever offers the highest level of protection against fire and smoke. The designer is encouraged to consult the ADA Accessibility Guidelines for more detailed requirements.

ADA allows rescue assistance areas to be located in a variety of places; however, the most logical locations would be within smokeproof egress stairs or within a rated egress corridor. Both locations are logical for people with disabilities to seek in the event of an emergency. Also, occupants without disabilities who are exiting the building will most likely see those awaiting assistance in these locations, and can alert emergency personnel. This "in-person" notification system can be extremely important to verify that all occupants have been evacuated, and could be critical in the event of the failure of the emergency communications system.

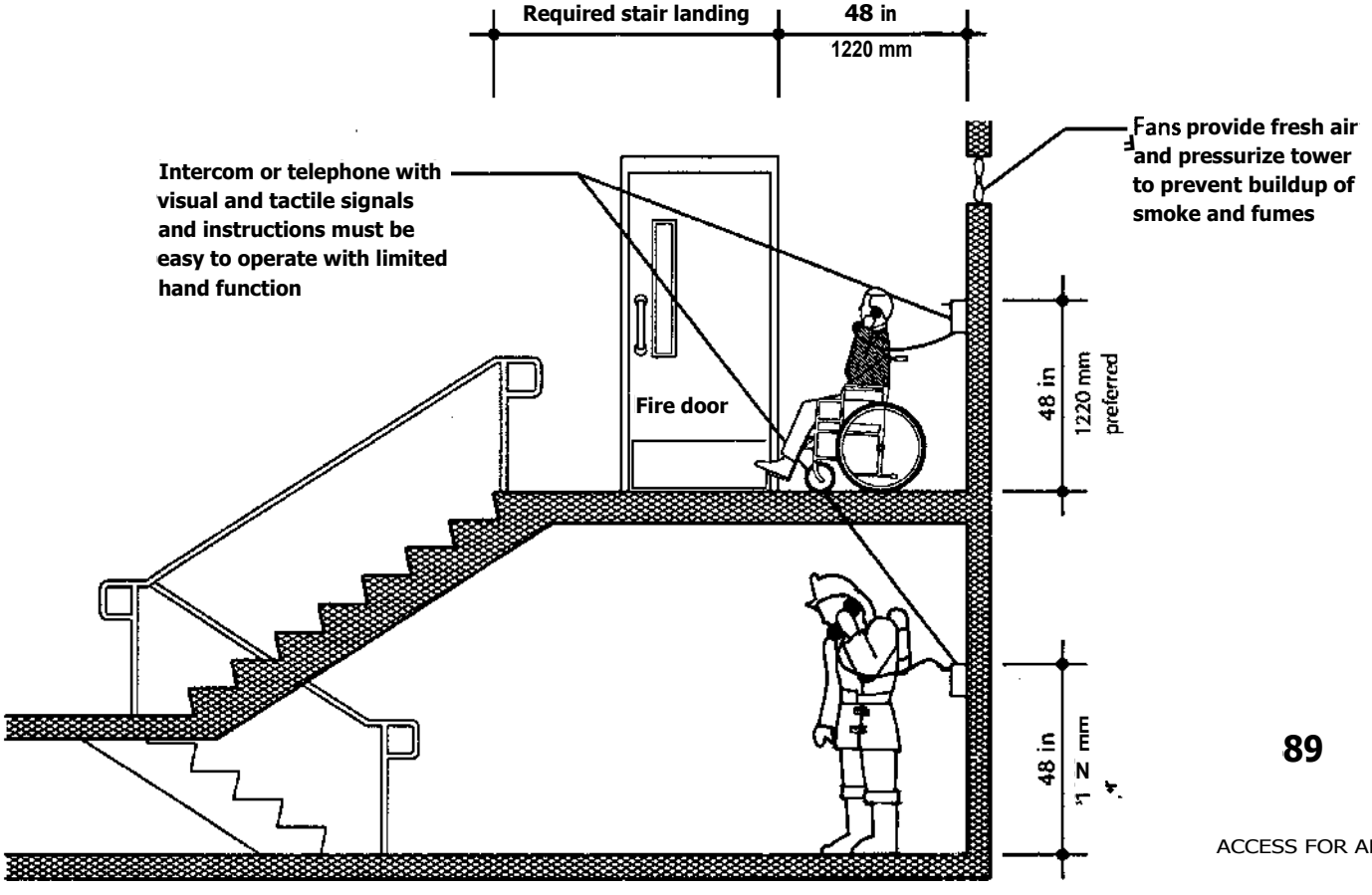

Source: ATBCT, *UFAS Retrofit Manual*

Interior Ramps, Stairs and Handrails

Interior Ramps

Interior ramps are used to provide an accessible means of moving from one level of a building to another when the change in level is not sufficient to require an elevator. Ramps frequently have minimal design, almost as an afterthought; however, they have the potential to be graceful or dramatic architectural elements if designed as an integral part of a building.

Regardless of design intent, ramps have come to symbolize access for people with certain mobility impairments. As a result, all ramps should be designed to be accessible. The design recommendations for accessible interior ramps are similar to those for exterior ramps.

The least possible slope should always be used for a ramp. Slopes of 5 percent or less (1:20, or a rise of one unit in height for each twenty units of length) are ideal for level changes, as these are easily negotiated by people with a variety of disabilities. Such slopes are not considered ramps and thus do not require handrails. Slopes of up to 8.33 percent (1:12, or a rise of one unit in height for each twelve units of length) are allowed by ADA; however, slopes approaching 8.33 percent may be difficult for people using manual wheelchairs to negotiate.

The minimum clear width of a ramp must be 36 inches (915 mm). Ramps are required to have a level platform (landing) which measures at least 60 inches (1,525 mm) in the direction of travel and is equal to the width of the ramp at the top and bottom. A level landing with the same dimensions is also required at maximum intervals of 30 feet (9 M) of run (horizontal distance). It is recommended that the straight level clearance in the direction of travel be at least 72 inches (1,830 mm) at the bottom of the ramp. Wherever the ramp changes direction, a landing that measures 60 by 60 inches (1,525 by 1,525 mm), which is large enough to allow a wheelchair to turn, is required. A minimum overhead clearance of at least 84 inches (2,130 mm) is recommended.

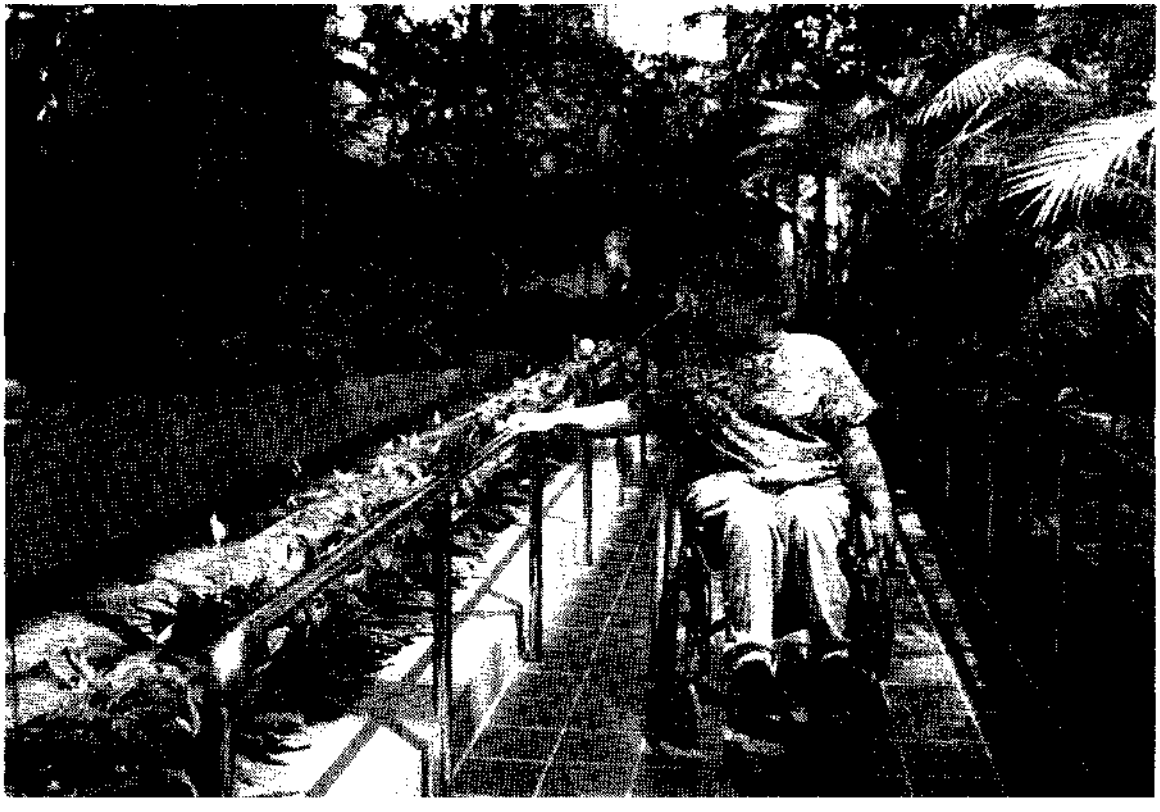

Fixed, non-slip materials should be used in ramp construction. Concrete surfaces which are broom finished across the direction of travel are preferred. Where gratings cannot be avoided, openings should not exceed 1/2 inch (13 mm) in any direction.

A 2-inch (50 mm) high curb is required on both sides of a ramp where there is a drop to floor level. The curb serves as a wheel stop.

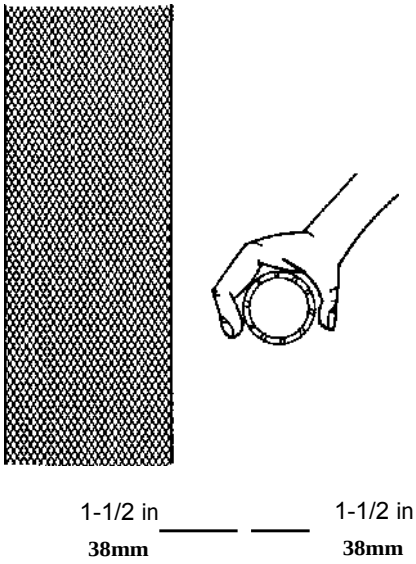

Standard Round Handrail
with 1-1/2 inch Diameter

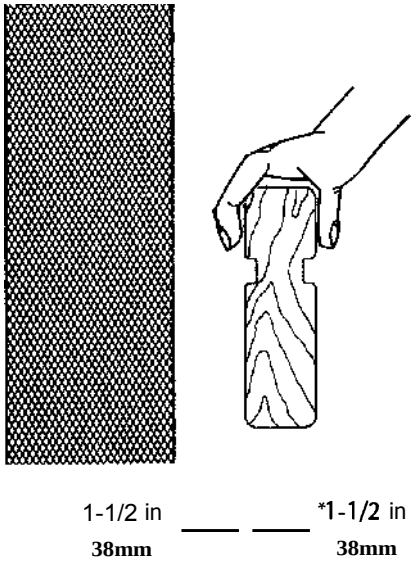

Handrail with Gripping Surface
Similar to Round Handrail

Handrails for Ramps

Handrails are required on both sides of ramps that slope between 5 and 8.33 percent and rise more than 6 inches (150 mm). The top rail should be located 34 inches (865 mm) above the ramp surface.' ADA requires that the top rail be 1-1/2 inches (38 mm) in diameter, located 1-1/2 (38 mm) inches from the wall, have no awkward shape or sharp corners, and be designed so that it can be easily grasped by those with limited hand function. This allows a person with disabilities to grasp the entire circumference of the rail. Ramps which will be used extensively by children should have a 24-inch (610 mm) high intermediate rail.

A 12-inch (305 mm) horizontal extension of the handrails beyond the top and bottom of the sloping surface is required to help provide a safe transition to level surfaces. These extensions should be parallel to level (non-sloping) surfaces.

Handrails must be strong and securely fastened because people with disabilities and elderly people may need to support their entire weight on them.

Stairs

ADA requires that stair treads be at least **11** inches (280 mm) wide and stair risers which exceed 7 inches (175 mm) are not allowed by most building codes. All stairs should conform with code-required stair formulas.

Nosings on steps, which might cause people with leg braces to trip, should be avoided in favor of sloping risers. Open riser stairs are prohibited by ADA for the same reason. Should nosings be unavoidable, ADA provides guidelines on how to make them safer for everyone.

If a stairway is uncarpeted, it is recommended that the entire width of each step have a strip of non-skid material. This strip should be no less than 2-1/2 inches (64 mm) wide and should present a sharp visual contrast with the background tread and riser colors. This aids people with visual impairments to use stairs. It is recommended that some type of detectable warning be provided at stairs for people who are blind.[2]

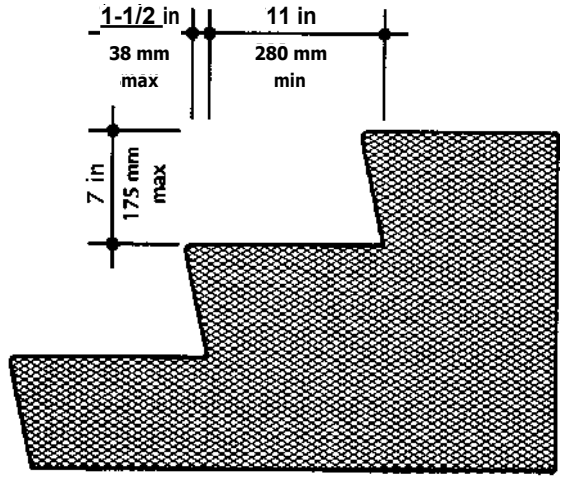

Sloped Risers — Preferred

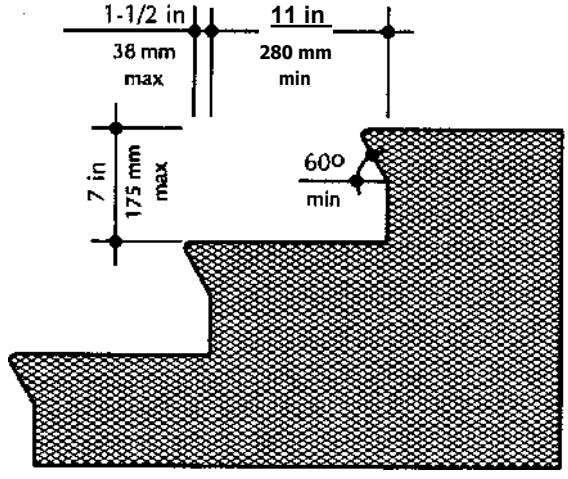

Rounded Nosings — Acceptable

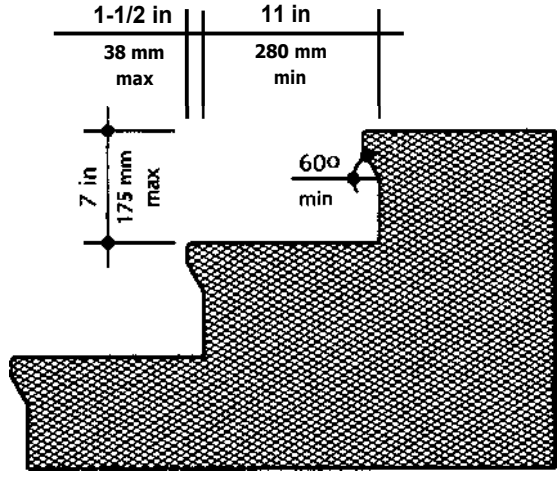

Handrails for Stairs

Handrails on both sides are required on interior stairs. Handrails should be 34 inches (865 mm) high, measured from the tread at the nosing.[3]

Handrails must extend 12 inches (305 mm) beyond the top riser, and 12 inches (305 mm) plus the width of one tread beyond the bottom riser. Whenever possible, extensions should be located on a continuing wall and should be placed so that they do not create a hazard.

Consideration should be given to the same issues of handrail section, shape and strength that have been previously discussed.

A plate with a raised numeral on the top of the handrail at each floor can serve as a means of floor level identification for persons with visual impairments.

For additional information, see the section, "Outdoor Ramps, Stairs and Handrails," beginning on page 61.

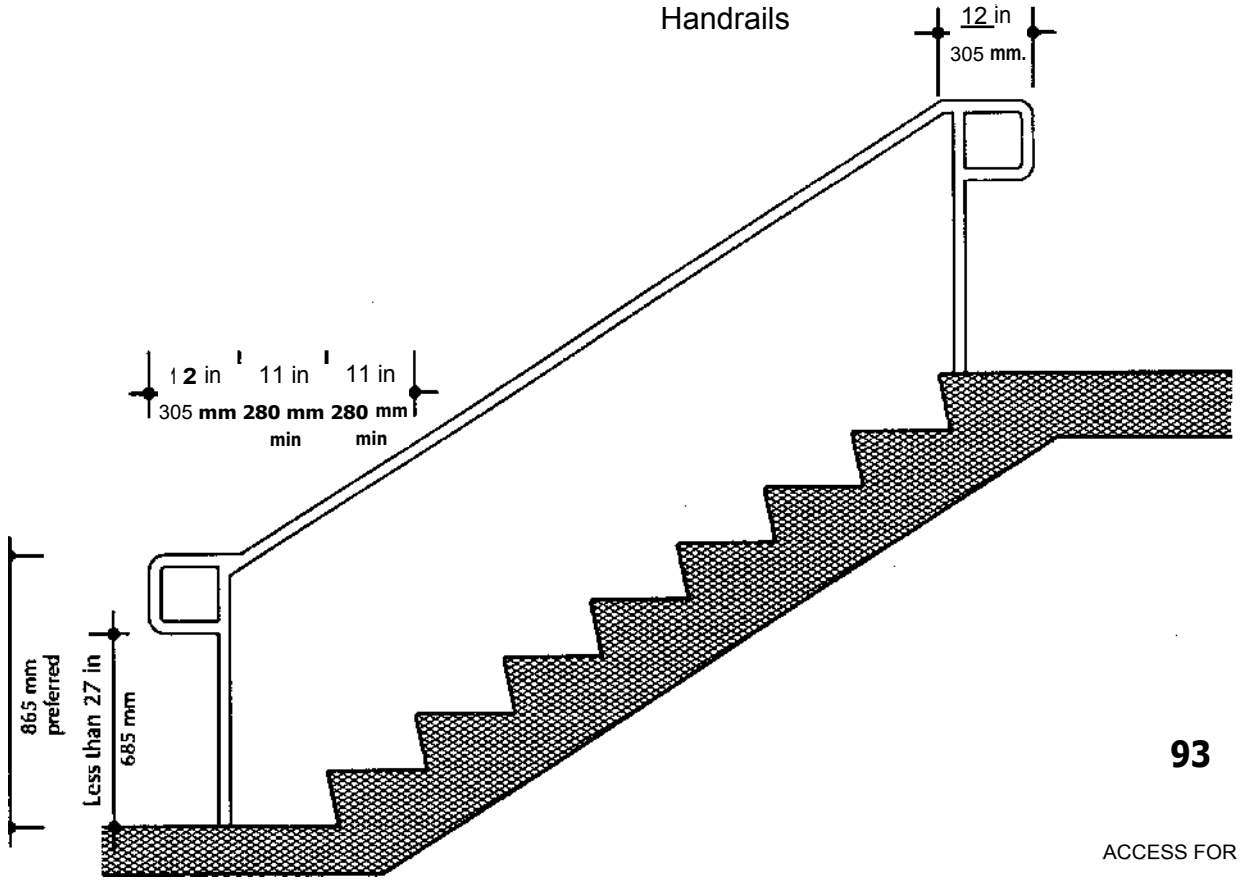

Elevators

Elevators are the most efficient mode of vertical transportation for people with disabilities. Elevators that are designed for accessibility can be used by people with most impairments, allowing quick and easy admittance to upper levels and basement spaces. The design and performance of all elevators must comply with both the ASME Al 7.1-Safety Code for Elevators and Escalators and local building codes.

In modifying existing banks of elevators, it is extremely important that **all** elevator cars be made accessible. This avoids breakdown and peak hour congestion problems created if only one car is modified.

The location of accessible elevator banks in large buildings is critical. The primary bank should be accessible; isolated locations should be avoided unless it is possible to summon immediate aid to such areas. The use of key-controlled or card-operated call controls should be avoided.

Operation and Leveling

All accessible elevators are required to be automatic and have a self-leveling feature which brings the car to floor landings within a tolerance of plus or minus 1/2 inch (1 3 mm), under normal loading conditions. The self-leveling device must be entirely automatic and independent of the operating device and must correct for over-travel or under-travel. It is recommended that the car also be maintained approximately level with the landing, irrespective of loading.

Passenger Service Time

The minimum acceptable time from notification that a car has answered a call (the signal should be both visual and audible) until the car doors begin to close is indicated in the accompanying table, and should never be less than 5 seconds. The distance listed in the table is the longest distance from a point in the center of the corridor or lobby opposite the call button on one end of the bank — a 60-inch (1,525 mm) maximum — to the center of the elevator which is furthest away (see the accompanying diagram). It is recommended that elevator doors remain fully open after responding to a car call for at least 5 seconds.

Distance		Time
feet	meters	seconds
0 - 5	0-15	
10	3	7
15	4.5	10
20	6	13

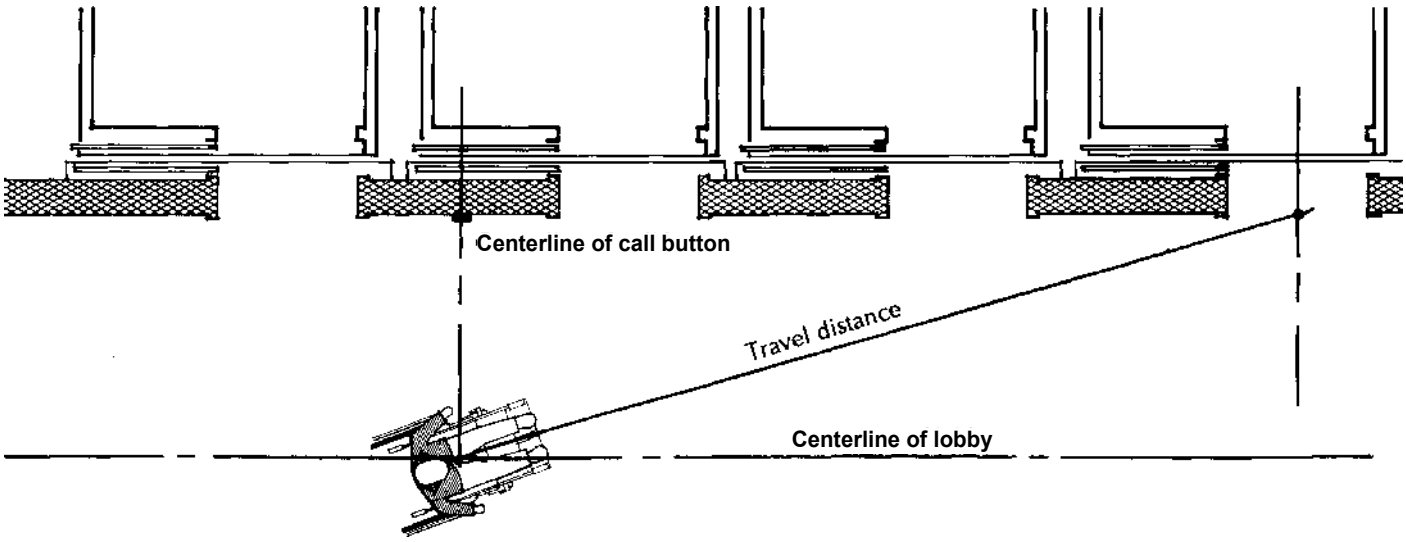

Door Operation and Size

Elevators must have power-operated, sliding, horizontal car and hoistway doors. ADA requires a minimum clear width of 36 inches (915 mm) for elevator door openings.

Door Re-opening Devices

Every door closed by automatic means is required to have a door re-opening device. When activated, this device will automatically reverse the closing movement of the doors, re-opening both the car and adjacent hoistway doors. The re-opening device must be capable of sensing an object or person in the path of a closing door without requiring contact. The device must be activated by objects passing through the opening at heights of 5 and 29 inches (125 and 735 mm) above the floor. The door re-opening device must remain open for at least 20 seconds.

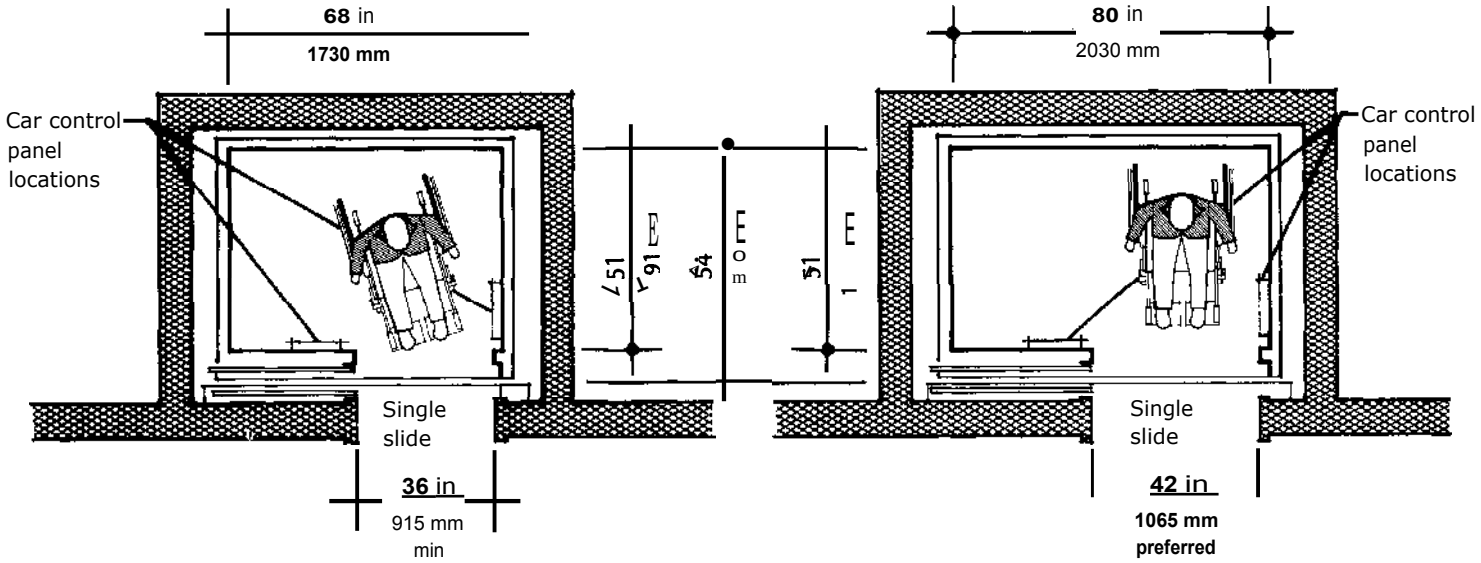

Car Dimensions

Car Dimensions

It is extremely important that the inside dimensions of accessible elevator cars be sufficient to accommodate the turning radius of a wheelchair. The accompanying diagrams and tables indicate minimum clear interior width and depth for various configurations and door positions. The dimensions shown are elevator industry standards, established for all member manufacturers. In cases where the need to accommodate stretchers is anticipated, the minimum width should be increased as shown.

Minimum Inside Car Dimensions

Capacity		Width		Depth				Opening			
				Total		Clear		S/Slide		C/O	
lbs	kg	in.	mm	in.	mm	in.	mm	in.	mm	in.	mm
2000	907	68	1730	54	1 370	51	1 295	36	915		
2500	1134	80	2030	54	1 370	51	1 295	42	1 065	42	1065
3000	1361	80	2030	60	1 525	57	1 450	42	1 065	42	1 065
3500	1 587	80	2030	68	1 730	65	1650	42	1 065	42	1 065
4000	1 814	92	2340	68	1 730	65	1650			48	1 220

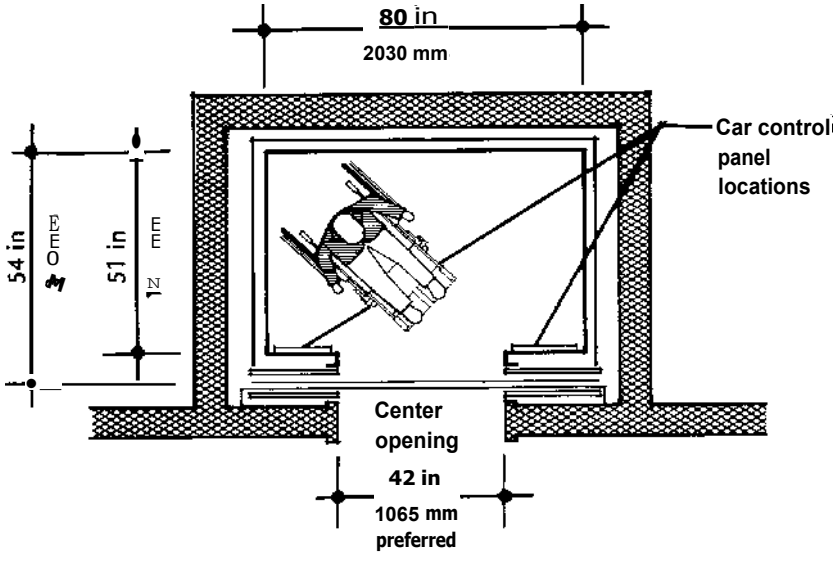

Car Dimensions

Car Controls

Elevator car controls should be readily accessible for persons using wheelchairs. Floor registration buttons and emergency controls should be arranged on a panel between 35 and 48 inches (890 and 1,220 mm) above the car floor, whenever possible. ADA allows buttons and controls to be as high as 54 inches (1,370 mm). This height may be necessary when buildings have a large number of floors. If buttons or controls are located higher than 48 inches (1,220 mm), a parallel approach to the panel must be possible. Control panels may be located as shown in the illustration on the previous page; however, a side wall location is preferred.

All control buttons should be at least 3/4 inch (19 mm) in diameter, exclusive of border or trim, and may have either flush or raised-type controls. All floor buttons should be provided with visual indicators which light up as each call is registered and extinguish as each call is cancelled. Flush buttons which require pushing deeper than 3/8 inch (10 mm) are not recommended.

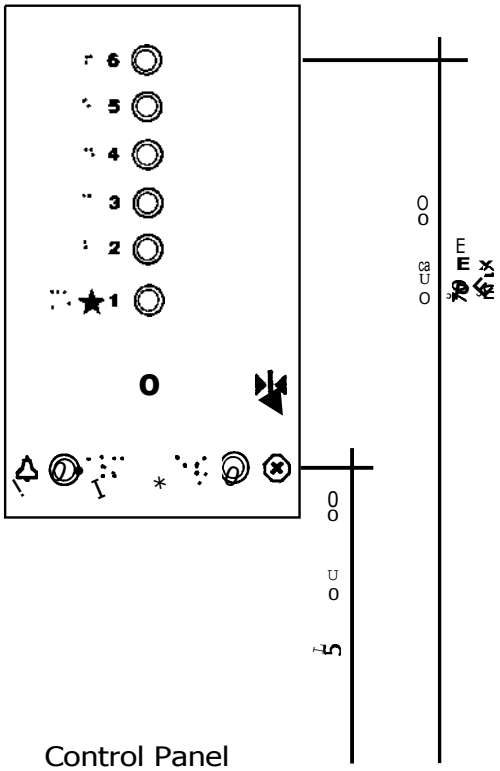

Control Panel

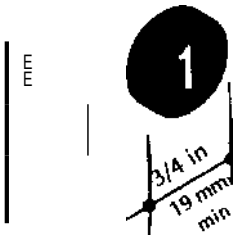

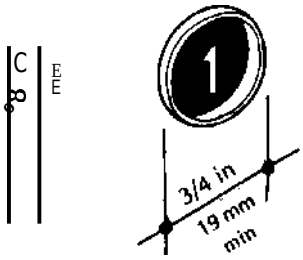

Control Buttons

All emergency control buttons should be grouped together at the bottom of the control panel. Standard symbols, as shown, are required by ADA to identify each essential control. Other controls such as key access switches, which are not necessary to normal operation of the elevator, should also be located within the recommended ranges outlined above, if at all possible.

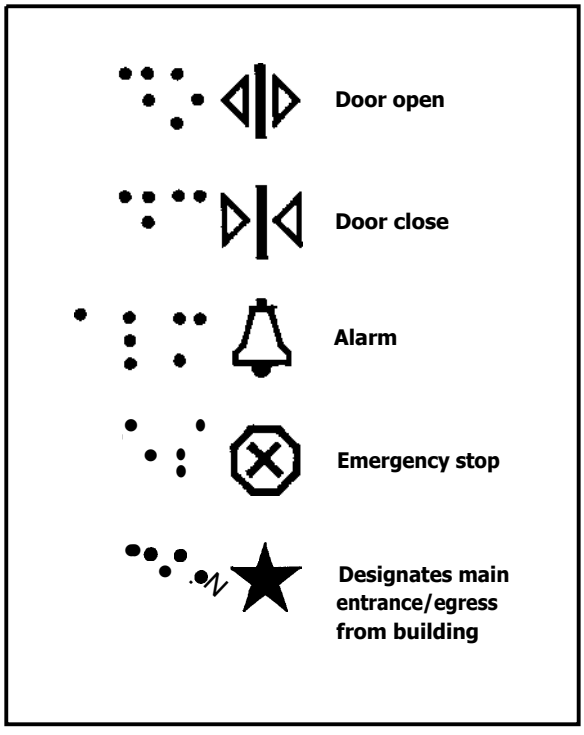

Emergency Control Button Designation

All controls, both inside and outside the car, must be designated by braille and raised standard characters or symbols as shown. Labeling for controls should be immediately to the left of the buttons on a contrasting background. Letters or numbers should be at least 5/8-inch (16 mm) high, and should be raised 1/32 inch for identification by people with visual impairments. ADA contains more specific requirments for raised and braille characters in Section 4.30. It is recommended that these guidelines be consulted for further information.

Car Position Indicators and Signals

A car position indicator which shows the position of the car in the hoistway is required above the car control panel or above the door opening of each car. As the elevator travels past each floor, the level is indicated by an audible signal sound and a lighted numeral which corresponds to the landing which the car is approaching. Permanent numerals at least 1/2-inch (13 mm) high and mounted on a contrasting background are required.

It is recommended that an automatic verbal announcement system be provided instead of an audible signal. Such a system can announce each floor call as it is registered, and the floor number at which the car stops. A verbal announcement system allows people with visual impairments to use the elevator with more independence. The audible signals or announcements should be loud enough to be easily heard by people with limited hearing (at least 20 db), and should have a frequency in the middle ranges (less than 1,500 HZ).

Call Buttons

ADA requires that accessible call buttons be located 42 inches (1,065 mm) above the floor. Directional buttons, exclusive of border, should be at least 3/4 inch (19 mm) in diameter and may be either raised or flush. A visual indicator that registers each call when received and cancels each call as answered is also required. An operating depth of 3/8 inch (10 mm) or less is recommended for flush buttons. Objects mounted beneath the call buttons, such as ashtrays, may not project more than 4 inches (100 mm) from the wall surface.

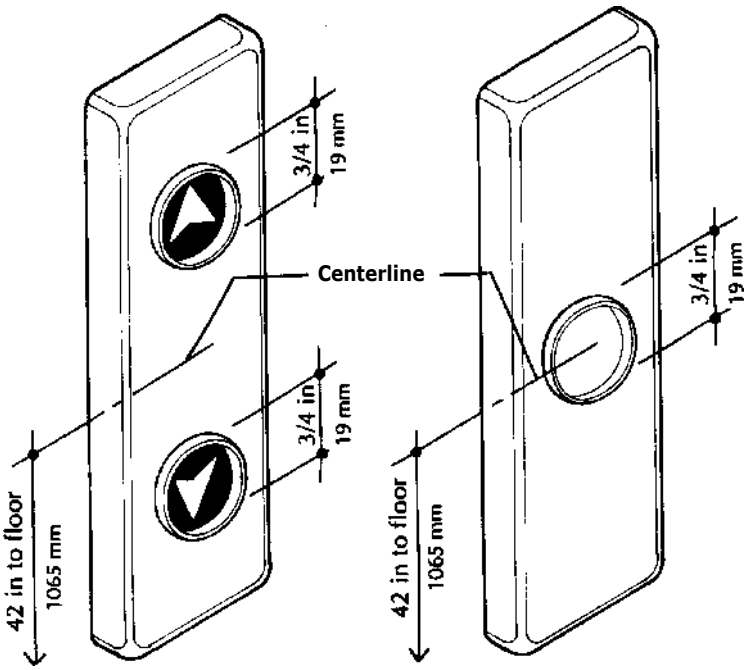

Call Buttons

Telephone or Intercommunications Systems

It is recommended that every elevator be equipped with an emergency telephone or intercom connected to a central exchange system or to another point outside the hoistway that is attended 24 hours per day. The phone or intercom controls should be located at a maximum of 48 inches (1,220 mm) from the floor. The handset should not require the use of a dial, and should be equipped with a cord at least 36 inches (915 mm) long. The system should be identified with a raised symbol such as the international symbol for telephones and lettering. Letters or symbols should be at least 5/8-inch (16 mm) high, and raised 1/32 inch. Permanently applied plates are acceptable.

A voice- or scream-activated intercom system is easier for most people to use, especially in a panic situation. Whichever type of system is employed, provision must be made for it to be used by people with speech or hearing impairments. A button or switch should be provided to activate a distress call for those who cannot speak. In addition, some type of visual indication that rescue is on the way should be available.

Door jamb Markings

Elevator doors are required to be marked with raised and braille floor level designations affixed to both sides of the door jamb on the lobby side to aid people with visual impairments. These floor indicators must be located 60 inches (1,525 mm) above floor level, and are required to be at least 2 inches (50 mm) high. For persons with limited sight, the most visible markings are permanently-mounted characters on a contrasting background.

Hall Lanterns

Visual and audible signals that indicate which car is answering the call and the direction in which that car is traveling are required at each elevator entrance. The hall lantern fixture must be placed at least 72 inches (1,830 mm) above the floor. For maximum visibility, the visual signal for each direction must be at least 2-1/2 inches (64 mm) in the smallest dimension.

It is essential that the hall lantern signal be visible from the vicinity of the call button. Audible signals should sound once for the UP direction and twice for the DOWN direction. A verbal annunciator that says "up" or "down" is preferred.

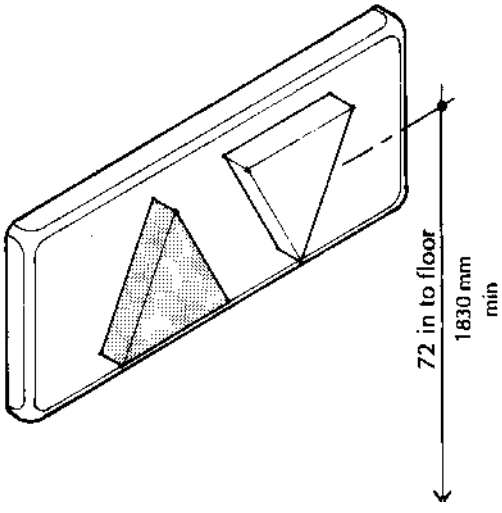

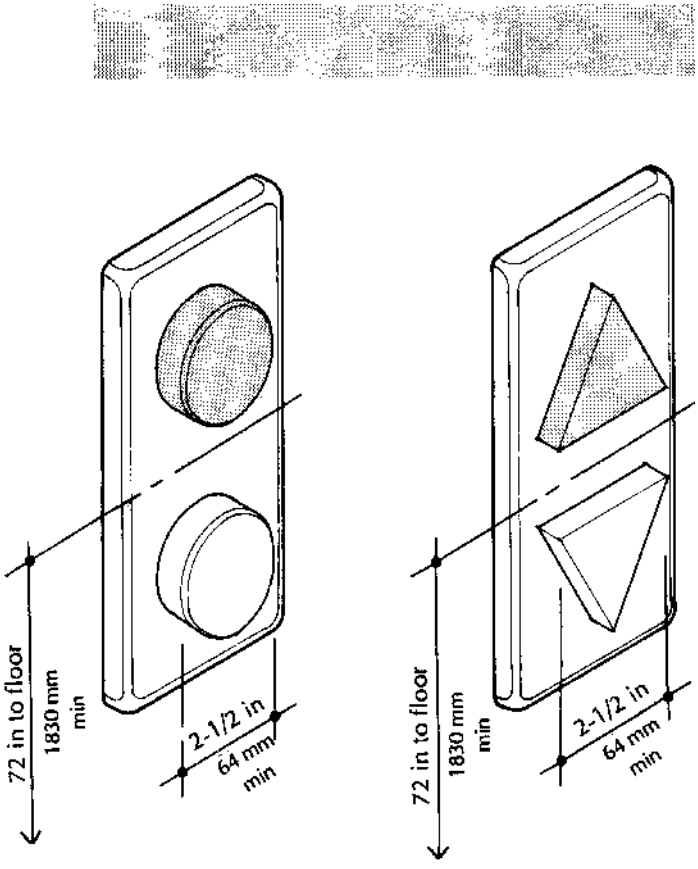

Hall Lanterns

Illumination

Adequate illumination for car control and landing areas requires a lighting level of at least five (5) foot candles (53.8 lux).

Floor Coverings

Elevator floors should be covered with a hard, non-slip surface which permits easy wheelchair movement. If carpeting is desired, it should be heavy duty with a low pile and a tight weave. Carpeting should be installed without padding and be securely attached.

Handrails

Handrails are recommended for the rear wall and both side walls of every elevator car. The smooth metal rail should be securely attached with a 1-1/2 inch (38 mm) clearance from the walls. Suggested height from the floor is 34 inches (865 mm).

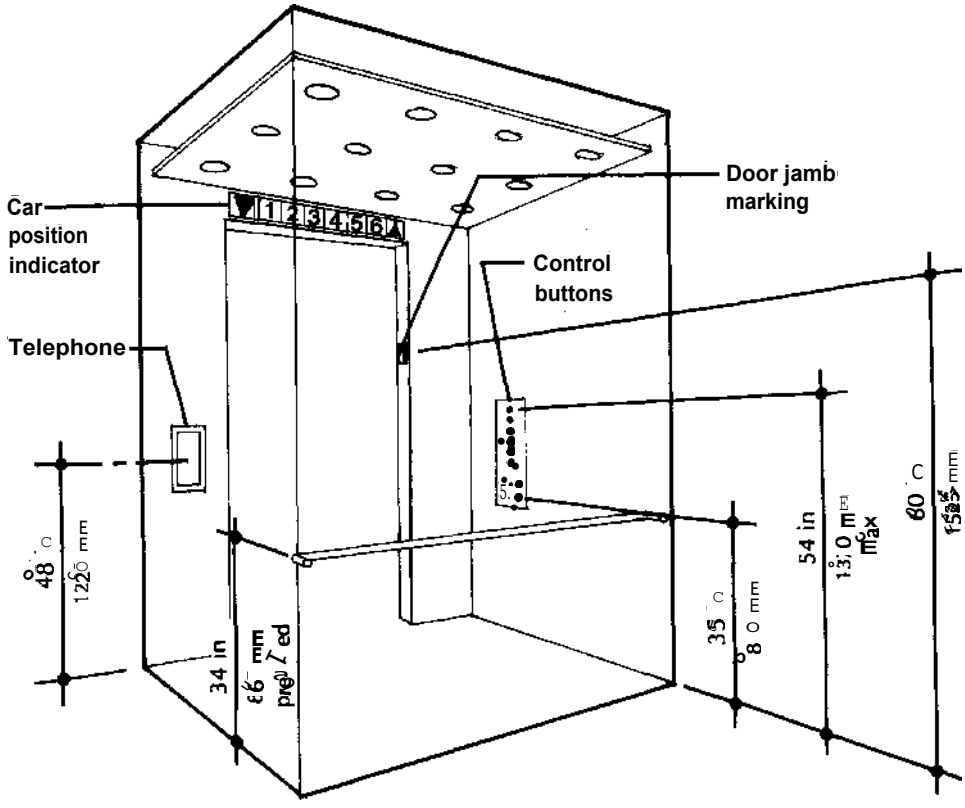

Elevator Cab

Emergency Use

Elevators cannot be considered a code-approved means of exit in an emergency situation. Every building must have a definite plan to provide emergency egress for people with disabilities. Areas of rescue assistance, if they are provided, should be a part of this plan.

During an emergency, all elevators are normally returned to the ground floor for use by firemen. However, at least one elevator should be made available for use by authorized personnel to assist in the evacuation of persons with physical impairments. In addition, an explicit plan for egress should exist for situations which might render all elevators useless, such as electric power failure.

Wheelchair Lifts

Although ADA allows the use of wheelchair lifts in specific situations, their use is strongly discouraged. Alternate methods of vertical movement, as described throughout this book, should be integrated into new projects.

Occasionally, wheelchair lifts may be necessary when modifying existing buildings where alternative methods are not feasible. Previously, wheelchair lifts in the State of Ohio were governed by strict limitations. Such lifts could not exceed 12 feet (3.6 M) of vertical travel and could not penetrate a floor slab.

The State of Ohio Division of Elevator Inspections has recently been given the authority to relax their limitations in cases where a lift provides the only means of access for people with disabilities.

As currently written, each wheelchair lift installation, whether interior or exterior, must conform to the ASME 1 7.1—Safety Code for Elevators and Escalators. In some cases, a lift which deviates from the state maximum height requirement may be the only feasible method of providing access for people with disabilities. In such a case, the non-conforming installation must undergo a special evaluation by the Division of Elevator Inspections. The inspector must be convinced that all other alternatives have been explored and found not feasible. Additional requirements may be imposed by the inspector in order to ensure the safety of a non-conforming installation. It would be extremely difficult, if not impossible, to develop a convincing argument for the use of such a lift in new construction.

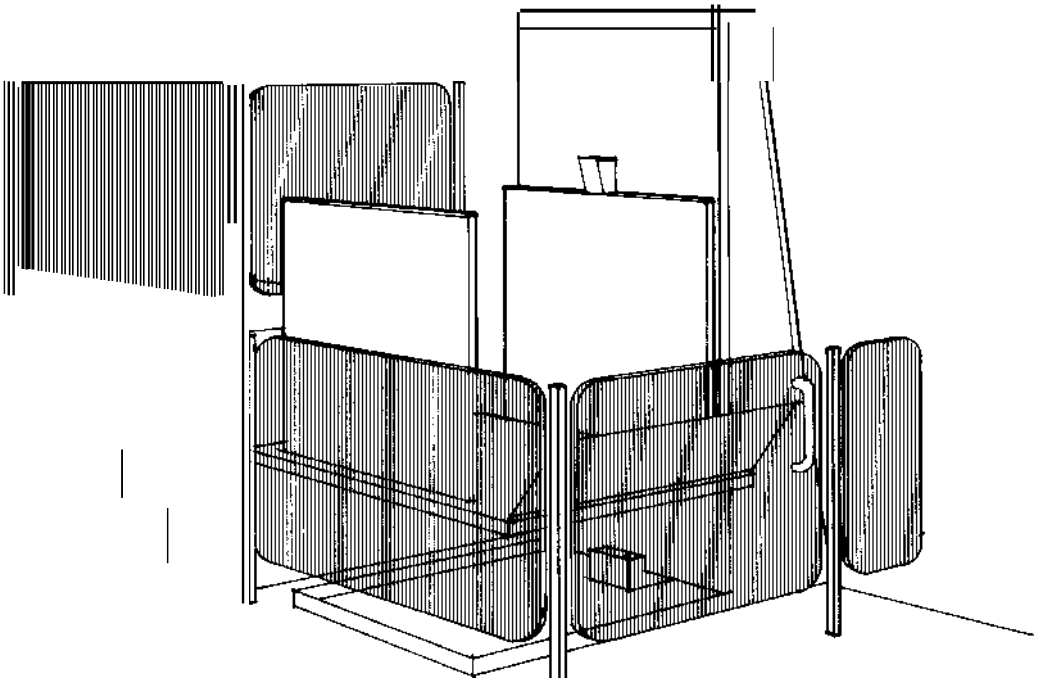

Wheelchair Lift

Escalators, Power Ramps and Walks

Escalators

The use of escalators by persons with mobility impairments is limited by the type and speed of the continuously moving stairs. Many elderly people, as well as those with agility or visual impairments, have difficulty getting on and off escalators, although some dog guides have been trained to assist people in these situations.

Slower escalator speeds might help people use escalators with more confidence, but could create additional traffic congestion. In all cases, some alternative form of vertical circulation must be provided for people who cannot or do not wish to use escalators.

The design of all escalators must comply with applicable sections of ASME 17.1—Safety Code for Elevators and Escalators. Treads and risers of contrasting colors increase safety for persons with minimal perceptive abilities.

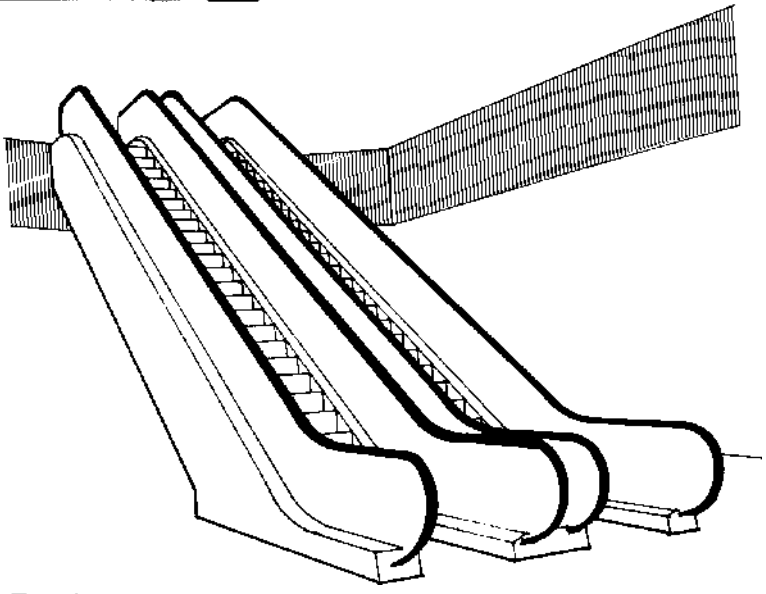

Escalator

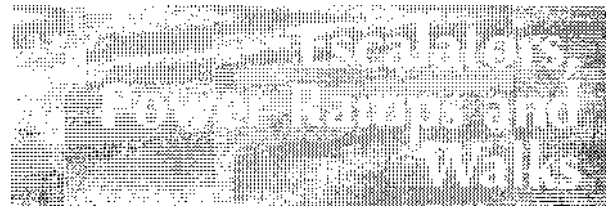

Power Ramps and Walks

Power ramps and walks can be used by some, but not all, people with disabilities. People with diminished strength and stamina benefit most from such assisted movement devices. However, people using wheelchairs or braces and people with visual or agility impairments will have difficulty getting on and off of power ramps and walks.

Alternative vertical movement devices must be provided whenever power ramps are used. As with escalators, power walks and ramps fall under the regulatory control of the Ohio Division of Elevator Inspectors and must conform to ASME 1 7.1—Safety Code for Elevators and Escalators.

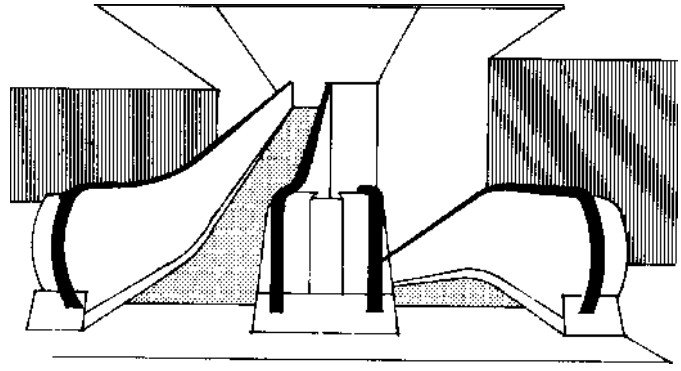

Power Ramp

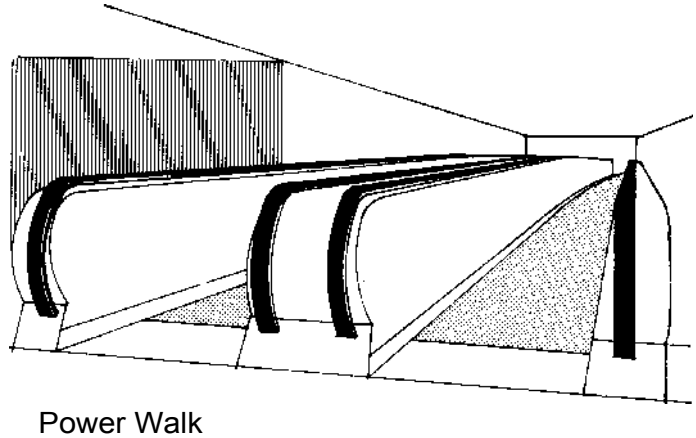

Power Walk

Toilet Rooms

Universal design in toilet rooms will make them safer and more convenient for everyone to use. Although certain accommodations which are specific to people with disabilities are required, many elements can be designed in a manner which will be accessible for all people.

All public toilet facilities are required to have at least one toilet stall and lavatory accessible for persons who use wheelchairs. In addition, all accessory items such as mirrors, soap dispensers, towel dispensers, waste receptacles, sanitary napkin vending machines and disposal receptacles should be within reach. All men's toilet rooms must have one accessible urinal.

Accessibility

In designing new toilet facilities, careful study must be given to traffic patterns and the location of accessible toilet stalls and lavatories. The required number of each type of accessible stalls, fixtures and lavatories should be determined from local building codes.

Toilet room doors which are 36 inches (915 mm) wide, providing a minimum clear opening of 34 inches (865 mm) are preferred to allow access by persons using wheelchairs. A minimum clear floor space of 60 inches (1,525 mm) is required for doors which swing into the room; doors which swing out of the room should have a minimum clear floor space of 48 inches (1,220 mm). The clear floor space must be level to allow the wheelchair to remain stationary.

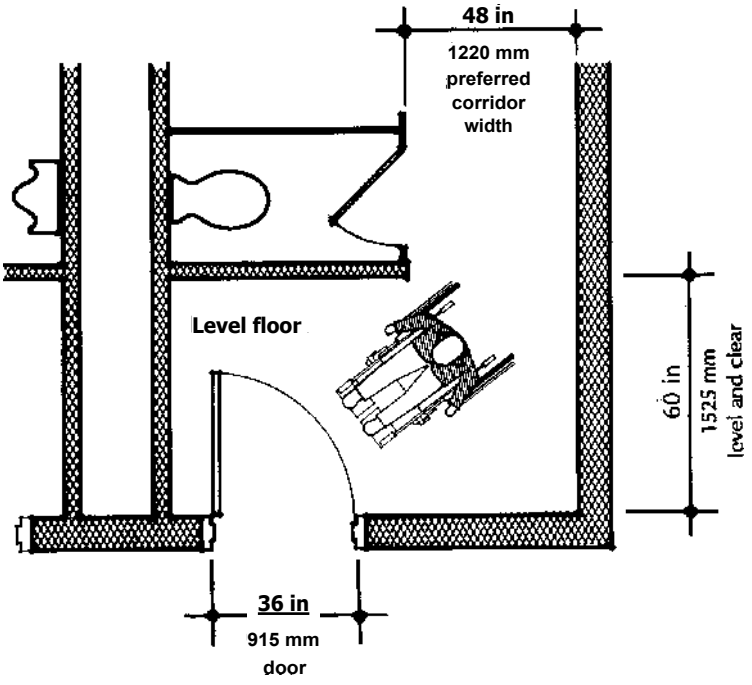

Toilet Room Door (swings in)

Accessible Toilet Rooms

A clear turning space at least 60 inches (1,525 mm) square is required for wheelchair maneuvering in accessible toilet rooms. Fixtures or equipment may overhang the clear turning space if vertical clearance is maintained as illustrated on page 110, and the required clearances for turning, door operation and individual fixtures may overlap. Protruding objects should not create a hazard for persons with visual impairments.

If a screen wall or privacy vestibule is provided, the above clearances must be maintained.

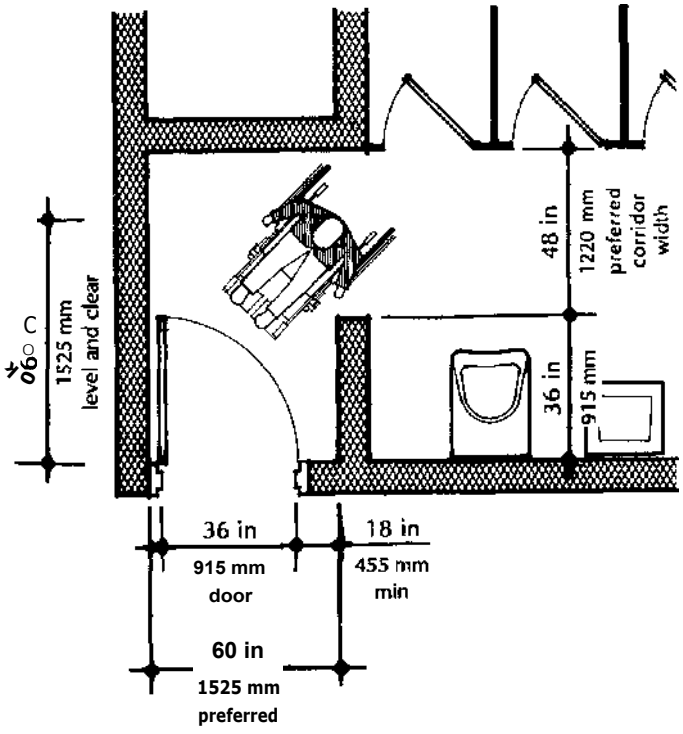

Toilet Room Door (swings in) with Minimum Vestibule

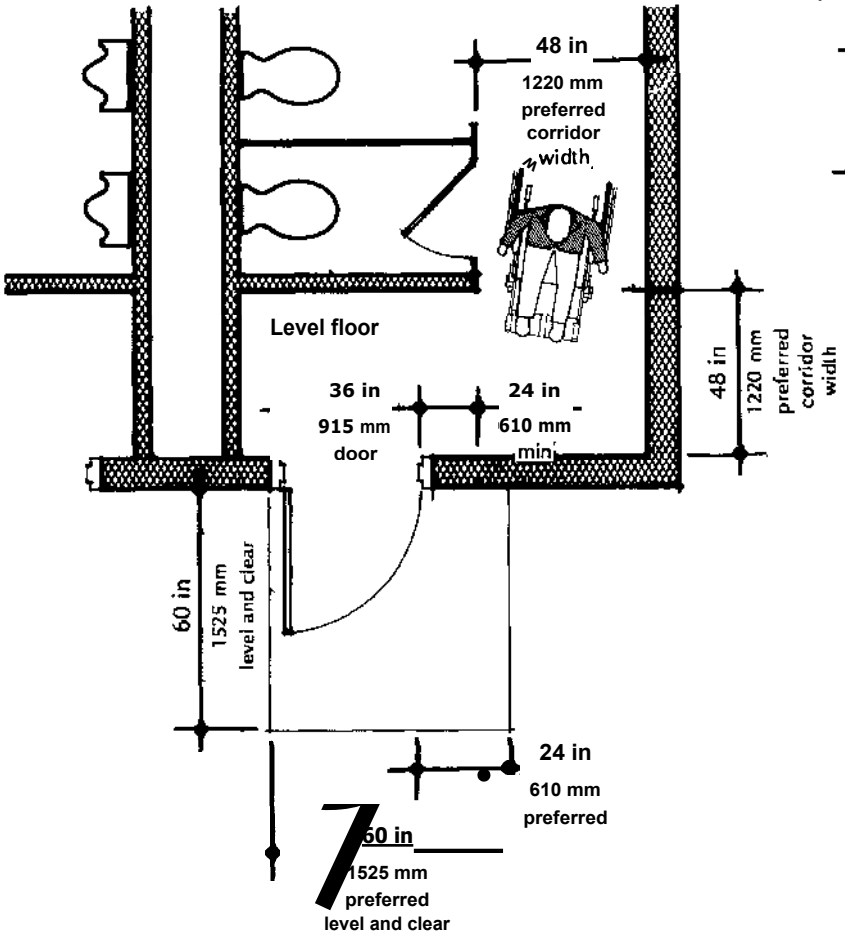

Toilet Room Door (swings out)

Toilets and Toilet Stalls

ADA requires that accessible toilet stalls for new construction projects be 60 inches (1,525 mm) wide. Required stall depth depends on whether the toilet is wall- or floor-mounted, but a depth of 60 inches (1,525 mm) is recommended in both cases. If six or more stalls are included in a single rest room, ADA requires that an additional 36-inch (915 mm) wide stall with parallel grab bars be provided.

Stall doors are required to provide at least 32 inches (815 mm) of clear width, but a 36-inch (915 mm) door, providing at least 34 inches (865 mm) of clear opening is preferred. Doors must swing outward. A handle which can be pulled should be provided on both sides of stall doors so that latches need not be used to pull the doors closed. A hook for clothing or purses mounted at a maximum of 54 inches (1,370 mm) is recommended. The hook should be located on one of the fixed partitions in order to avoid eye injuries.[4]

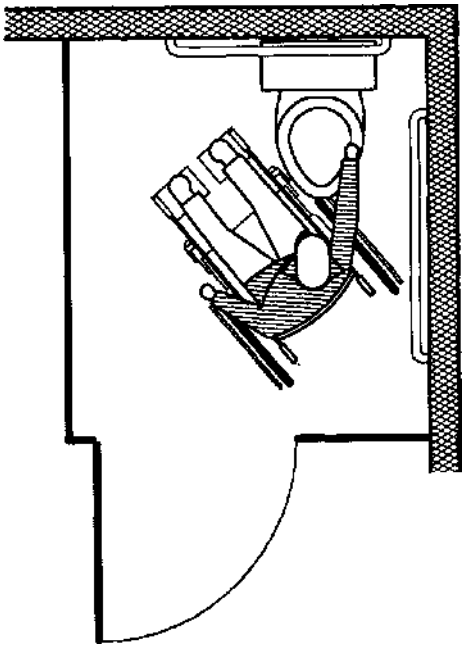

Diagonal Transfer - Step One

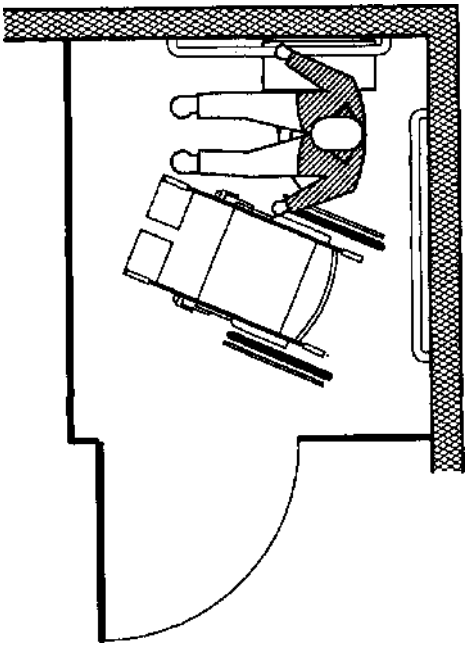

Diagonal Transfer - Step Two

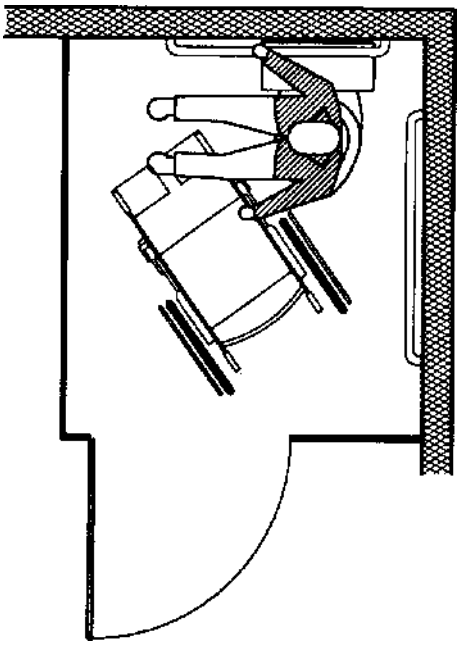

Diagonal Transfer - Step Three

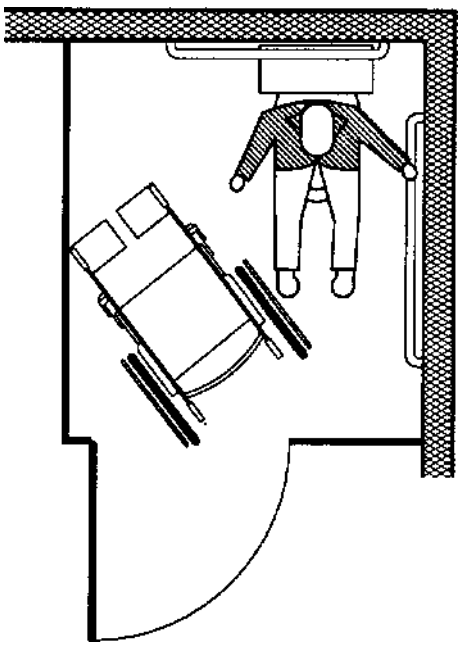

Diagonal Transfer - Step Four

The center of each accessible toilet must be located 18 inches (455 mm) from the side of the stall where the grab bar is located. ADA requires a seat height between 17 and 19 inches (430 and 485 mm) from the floor. Eighteen inches (455 mm) is recommended because it is the approximate height of the average wheelchair seat, but is not too high for most ambulatory people.

Grab bars are required on the wall behind the toilet and the side wall adjacent to the toilet. These bars, 1-1/2 inches (38 mm) in diameter, may be mounted between 33 and 36 inches (840 and 915 mm) above the floor. Toilet paper and other dispensers should be located within easy reach of a seated person. Flush controls may be automatic or manual, but must be mounted no higher than 44 inches (1,120 mm) from the floor.

This 60-inch (1,525 mm) square stall size and L-shaped bar configuration permits a person who uses a wheelchair the maximum flexibility to employ either a side or front approach to the fixture, and allows space for a second person to assist, if required. This stall size also provides adequate space whether the toilet is wall-hung or floor-mounted.

The aisle between the front of a row of toi let stalls and a parallel wall or facing row of stalls should be a minimum of 48 inches (1,220 mm) wide. This clearance will allow persons using wheelchairs to pass in front of other stalls to reach an accessible stall at the end of a row.

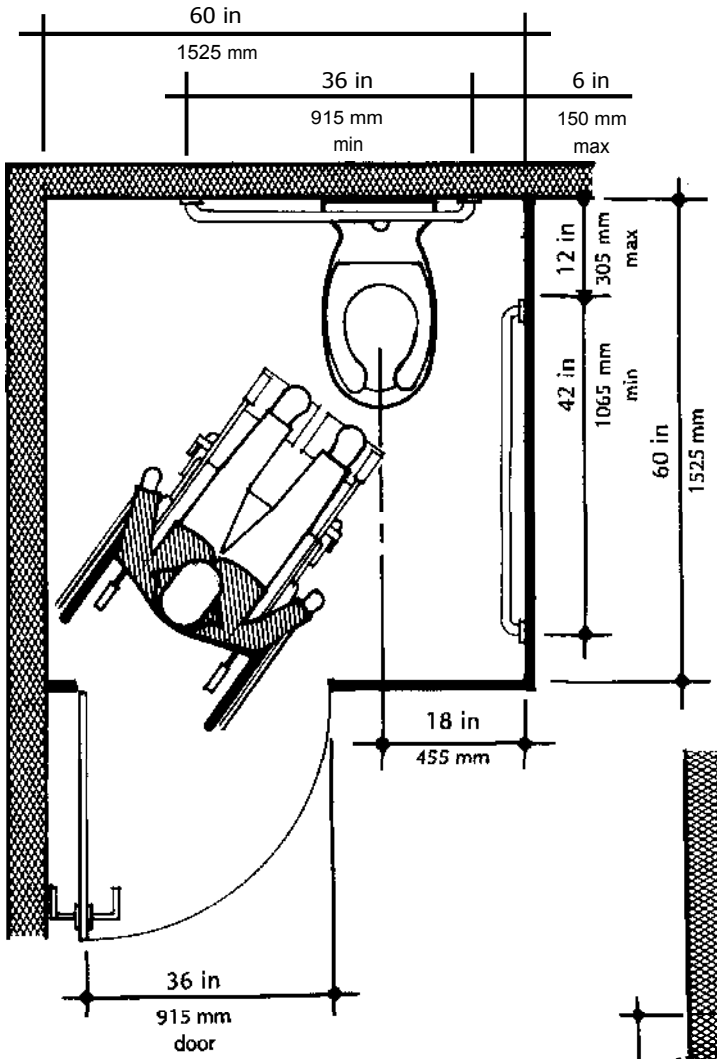

Accessible Toilet Stall

Lavatories

An accessible lavatory is required to have a minimum clearance of 29 inches (735 mm) from the floor to the underside of the lavatory counter or apron; however a 30-inch (760 mm) clearance is preferred to allow for wheelchair armrests. A clear floor space at least 30 by 48 inches (760 by 1,220 mm) is required in front of wheelchair accessible lavatories, and the lavatory should be centered within this space. The lavatory itself may project 19 inches (485 mm) into the clear floor space as long as adequate knee clearance is maintained.

The maximum lavatory height allowed by ADA, 34 inches (865 mm), is comfortable for people with a wide range of disabilities as well as for people without disabilities to use.

It is recommended that the lavatory drain outlet be located as far as possible from the front of the counter. Exposed metal piping which runs below the lavatory for hot water and drainage must be shielded or fully insulated to prevent injury to persons who use wheelchairs. PVC or ABS plastic is preferable to metal for drain traps because it has the ability to remain cool when hot water is being used. In addition, plastic piping eliminates the possibility of insulation deterioration or vandalism.

Vanity tops should be shallow, between 17 and 24 inches (430 and 610 mm) deep, to allow easy access to faucets, soap dispensers and mirrors. Shallow basins, no deeper than 6-1/2 inches (165 mm), must be used. Oval-shaped bowls are preferred, as they reduce the horizontal reach to the water controls.

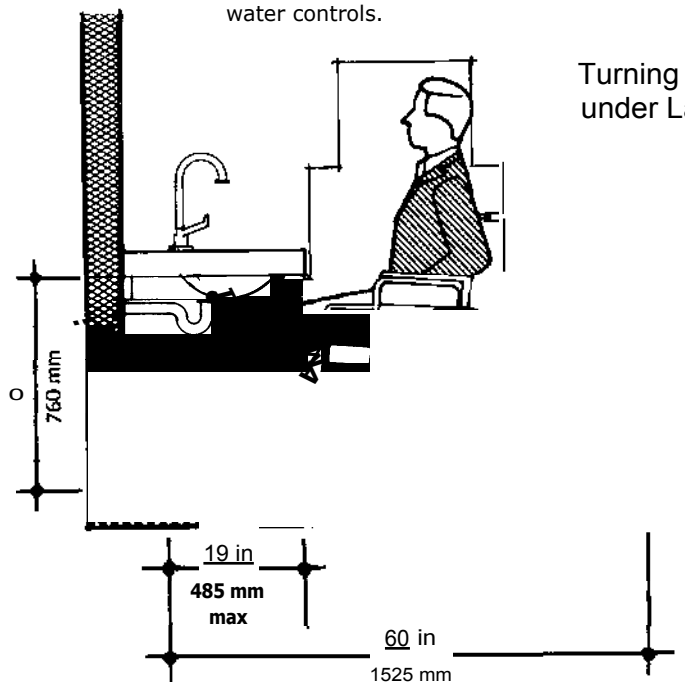

Turning Space under Lavatory

Accessible lavatories should be equipped with lever-type or push-type faucet handles or electronically controlled mechanisms. It is recommended that faucets be mounted no further than 18 inches (455 mm) from the front edge of the lavatory counter. Hot and cold water faucets should be clearly identified with graphics or colors as well as tactile symbols.

Urinals

Where urinals are provided, ADA requires that at least one be accessible. Accessible urinals may be floor-mounted or wall-mounted, but should have an elongated rim which projects at least 14 inches (355 mm) from the wall. The ADA maximum rim height for wall-mounted urinals, 17 inches (430 mm), is useable by people in wheelchairs and is also comfortable for people who are ambulatory. A clear floor space which measures 30 by 48 inches (760 by 1,220 mm) is required in front of accessible urinals. Privacy screens should be located a minimum of 30 inches (760 mm) apart. Flush controls may be automatic or manual, but must be no higher than 44 inches (1,120 mm) above the floor.

Although not specifically required by ADA, it is recommended that urinals be provided with vertical grab bars which are 1-1/2 inches (38 mm) in diameter and 24 inches (610 mm) long. These bars should be mounted 24 inches (610 mm) above the floor on both sides of the urinal and 1-1/2 inches (38 mm) from its edge.

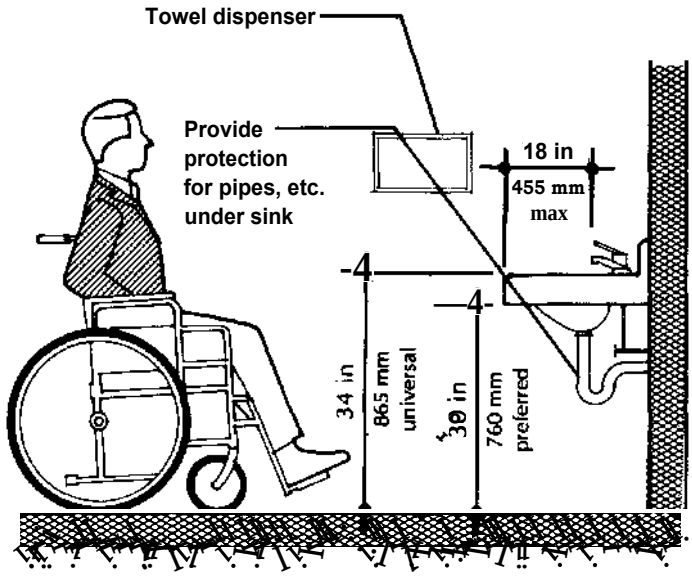

Accessible Lavatory

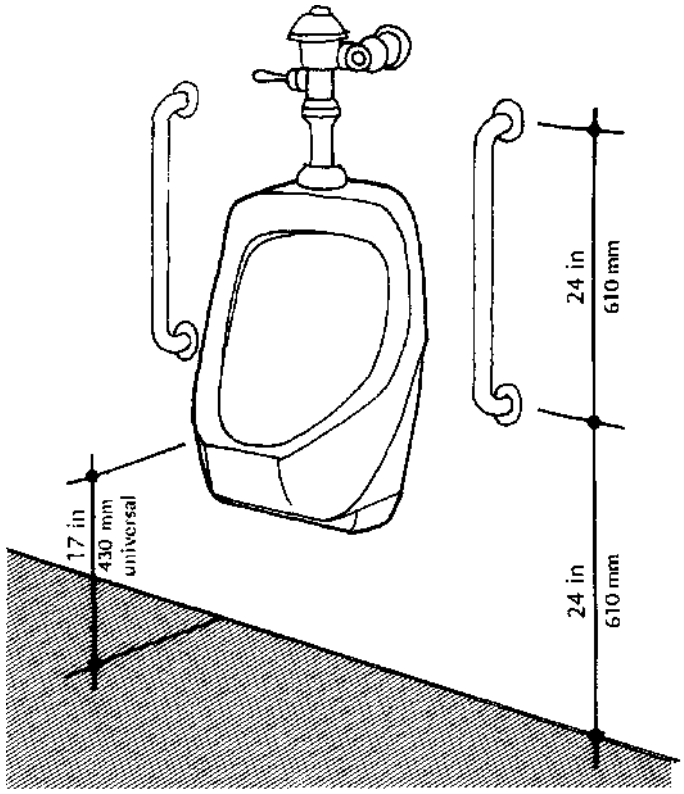

Accessible Urinal

Accessories

Persons who use wheelchairs often have difficulty using a mirror mounted above a lavatory because of its height. Therefore, full-length wall-mounted mirrors are preferred, because they can be used by all persons. If a mirror is mounted above a lavatory, its lower edge may be no higher than 40 inches (1,015 mm) above the floor. It is recommended that the top edge of any mirror be at least 74 inches (1,880 mm) above the floor.

Rest room accessories may be located anywhere within the reach ranges specified by ADA, as outlined in the chapter, "Basic Human Dimension Data," which begins on page 42.

It is preferable that towel racks, dispensers, disposers and appliances are mounted so that all operating mechanisms are within 40 inches (1,015 mm) of the floor. Locating towel dispensers within easy reach of lavatories increases safety and convenience for everyone. If people using lavatories must cross the room to reach a paper towel or electric dryer, they will drip water on the floor, causing it to become slippery and hazardous. Dirt which their wet hands may pick up from their wheel rims is an added inconvenience for people using wheelchairs. Towel dispensers are preferable to hot air devices, which are difficult to locate near sinks.

Soap dispensers should be easy to operate and towel advance mechanisms should be easy for persons with limited hand function to use.

An adequate lighting level of 50 foot candles (538 lux) is recommended in all rest rooms to aid people with impaired vision.

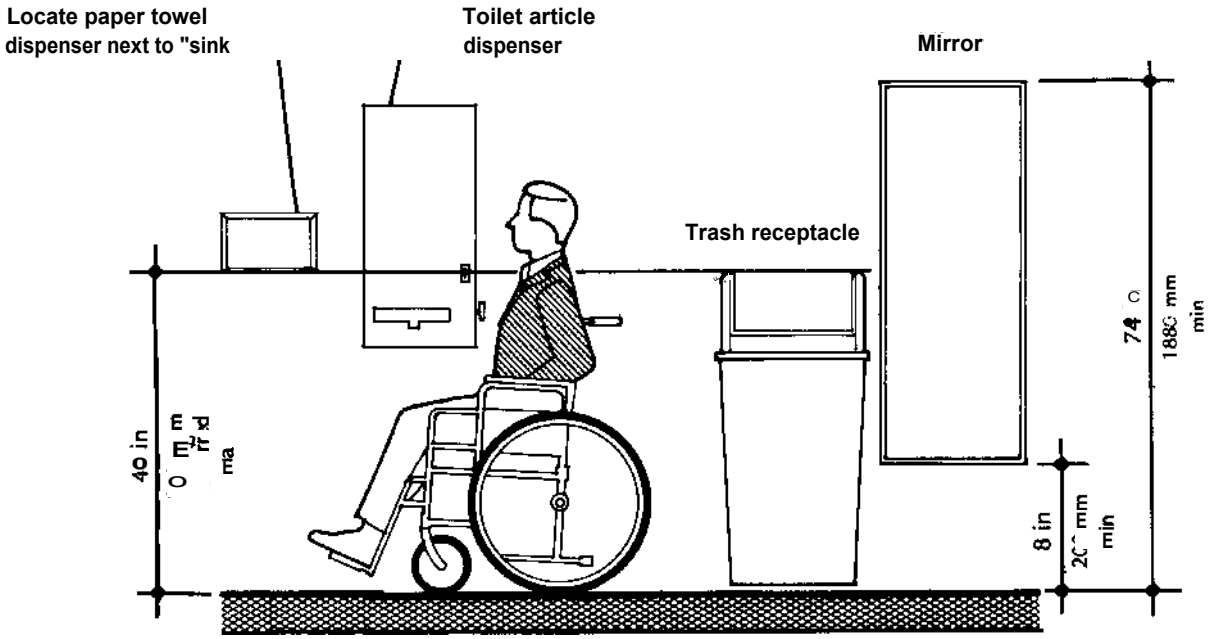

Toilet Accessories

Shower Stalls

Where ADA does not provide specific requirements, accessible shower stalls should be provided on the basis of two percent of the total number of stalls, or a minimum of one stall. Where more than one shower stall is provided, both right-handed and left-handed units are recommended to accommodate the needs of persons transferring from wheelchairs to showers.

The two basic types of accessible showers are the transfer shower and the roll-in shower. The transfer shower is a 36-inch **(915** mm) square stall with an L-shaped fixed seat located on the wall opposite the controls. Shower stall seats should be installed 1 **8** inches (455 mm) above the floor.[6] An L-shaped grab bar, located on the wall opposite the seat and returning along the back wall, should be provided. The shower should be designed so that a person with mobility impairments can pull the wheelchair up and transfer to the seat, then comfortably reach all controls from the seat.

The main advantages of the transfer shower are its small size, which allows persons to support themselves along its walls while showering, and the fact that it does not require any special equipment. The main disadvantage of this type of shower is that not all people with disabilities have the ability to transfer to a fixed seat.

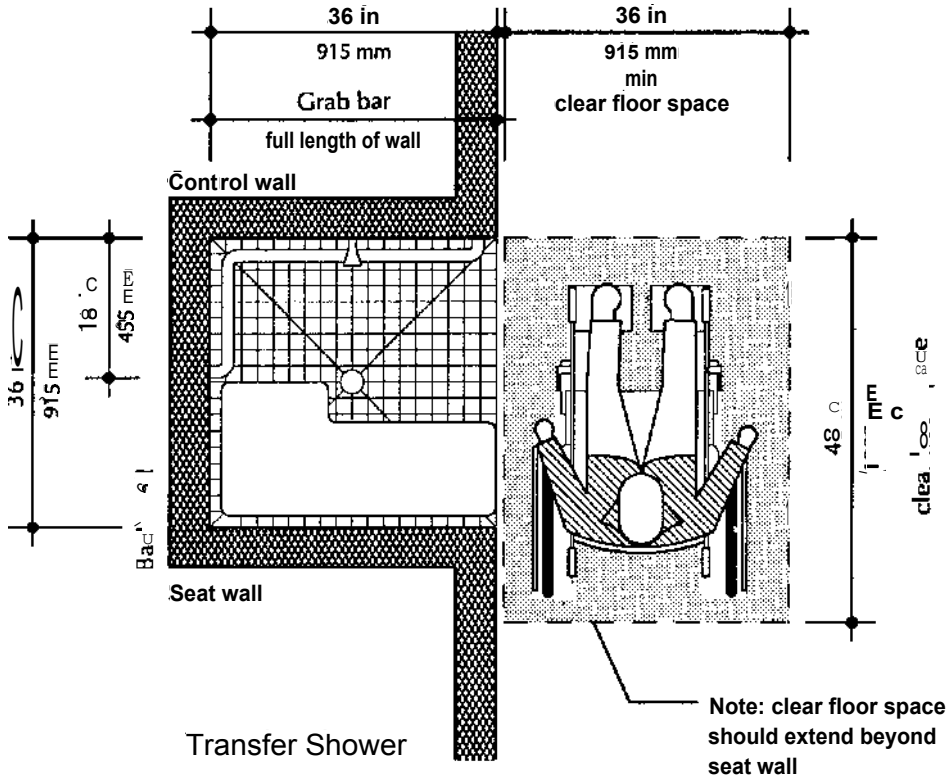

Transfer Shower

Roll-in showers may be used by everyone. People who are not able to transfer to a seat can use a shower wheelchair, and people who are ambulatory but need to be seated to shower can use a folding seat or a portable chair. Such facilities also provide generous space for people without disabilities to shower.

The roll-in shower should be a 36 by 60 inch (915 by 1,525 mm) stall with grab bars on three sides, although ADA requires only a 30-inch (760 mm) width. This type of shower requires a special shower wheelchair, which should be provided by a public facility, as not all people with disabilities travel with such chairs. Adequate space should be provided for the storage of these chairs.

A clear space at least 36 by 60 inches (915 by 1,525 mm) outside of the shower itself should be provided for transfer to and from the shower chair. In a public shower room, this additional clear space may be enclosed to ensure bather privacy. If a seat is provided inside a roll-in shower, it should be mounted on a wall adjacent to the controls, and should be hinged to swing up and out of the way of a shower wheelchair.

All accessible shower stalls, regardless of type, must be equipped with hand-held shower spray units which can also be used as fixed shower heads. Curtains are preferable to doors on accessible shower stalls. However, if doors are used they should be 36 inches (915 mm) wide, swing out of the stall, and provide a clear opening of 34 inches (865 mm).

Shower stall floors should have non-slip surfaces. Thresholds or depressed floors should not exceed 1/2 inch (13 mm) in height or depth. Raised curbs should be avoided, as persons who are ambulatory may have difficulty stepping over a curb, and such a rim would prevent wheelchairs from entering. Because it is difficult to prevent the overflow of water from a shower which has no raised curb, it is recommended that the entire room be waterproofed and tiled and that the floor be sloped toward the shower drain.

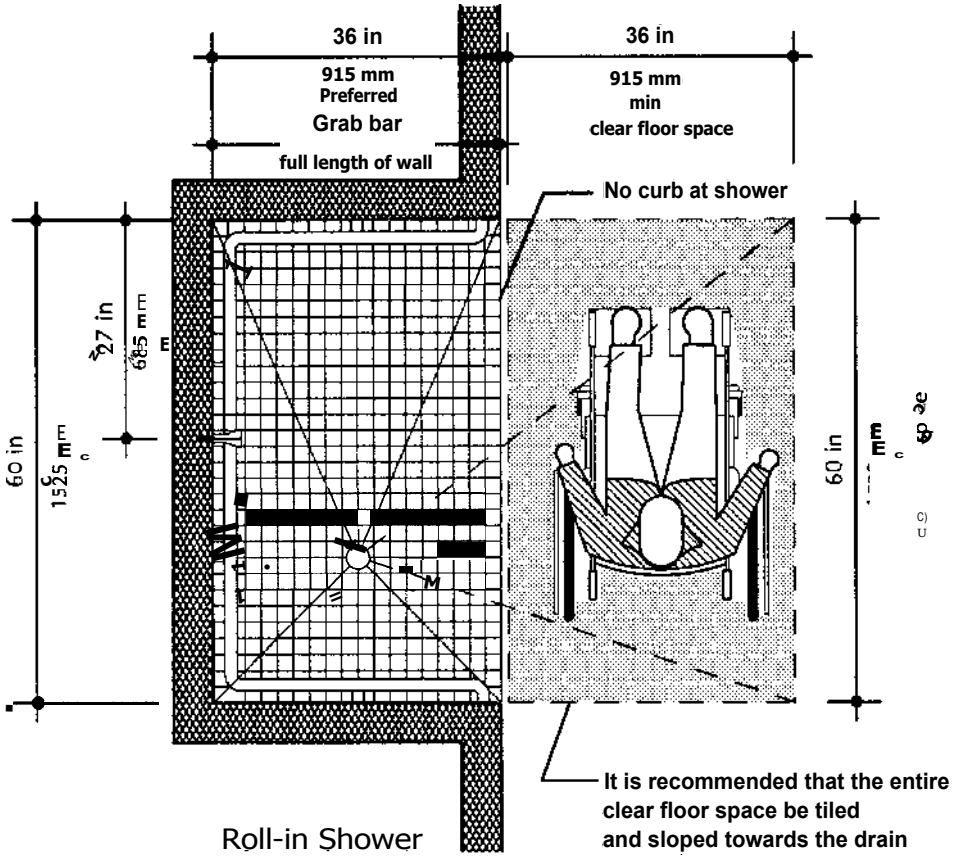

Roll-in Shower

All grab bars inside accessible showers should be 1-1/2 inches (38 mm) in diameter, and should be mounted at a height of 33 to 36 inches (840 to 915 mm). Single-lever-type water controls are preferred, and shower heads which are thermostatically controlled with anti-scald cut-off devices are recommended.

It is recommended that soap trays and towel racks or hooks be located no higher than 40 inches (1,015 mm) above the floor. Recessed soap trays and towel racks with rounded edges are preferred for safety reasons.

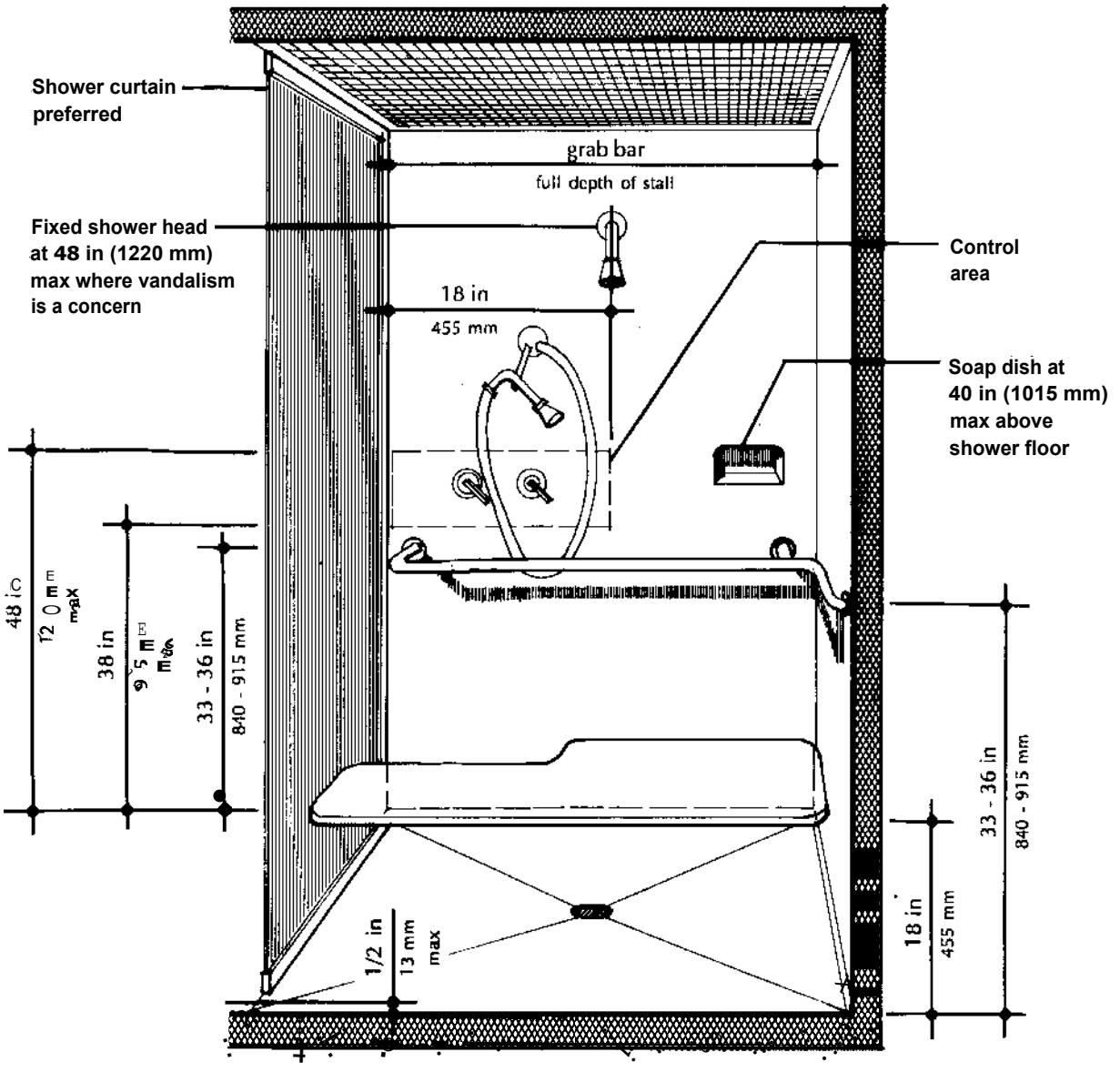

Transfer Shower

Conveniences and Controls

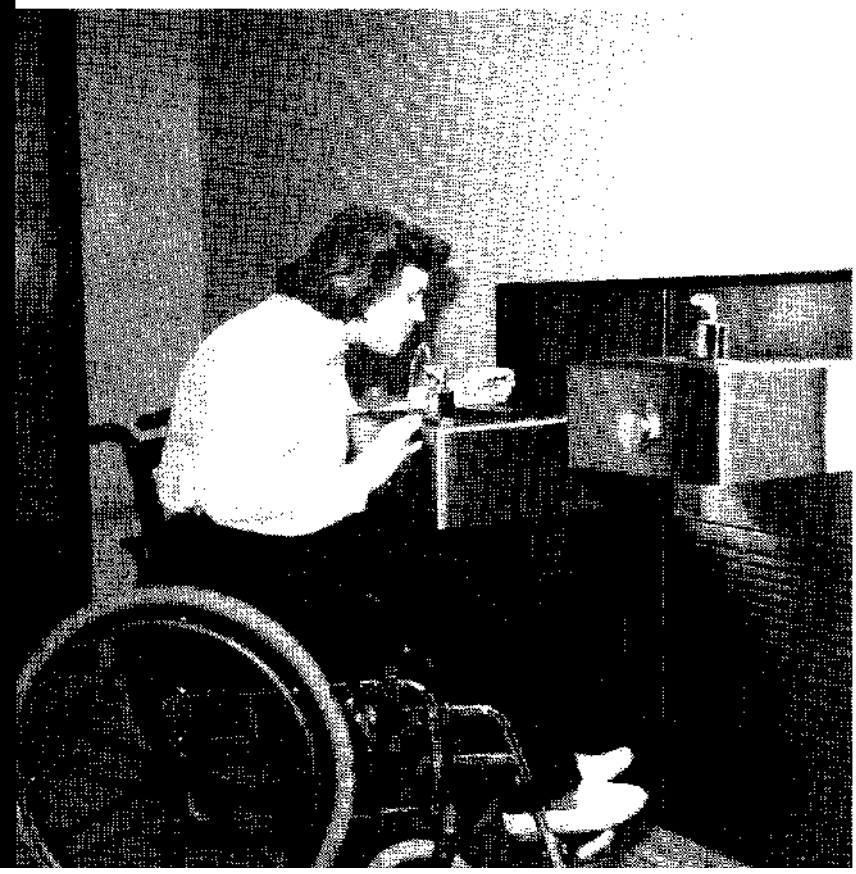

Guire-Willis & Associates, Columbus, Ohio

Convenience facilities such as drinking fountains, public telephones, vending machines, electrical outlets, and miscellaneous controls such as light switches, window operators, drapery and shade controls, thermostats and intercom stations (where they are provided) should be accessible for and usable by all persons.

Drinking Fountains

An appropriate number of accessible drinking fountains should be located on each floor of a building. ADA requires that half of the drinking fountains provided, but at least one per floor, be accessible.

The upper edge of a drinking fountain basin should be no higher than 34 inches (870 mm) above the floor. This will ensure that the ADA maximum spout height requirement is met for persons using wheelchairs. Children using wheelchairs may require a reduced fountain basin height of 30 inches (760 mm).

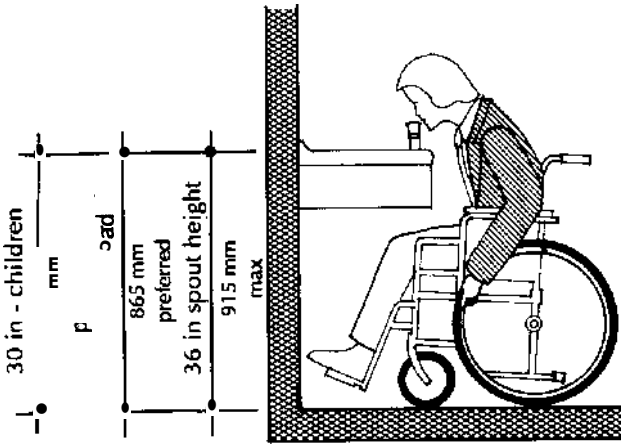

If only one drinking fountain is provided per floor, it is recommended that two heights be provided. A fountain which is higher than 36 inches (915 mm), for those who have difficulty bending, may be augmented with an attached basin mounted at 30 inches (760 mm), or a separate fountain at the lower height.

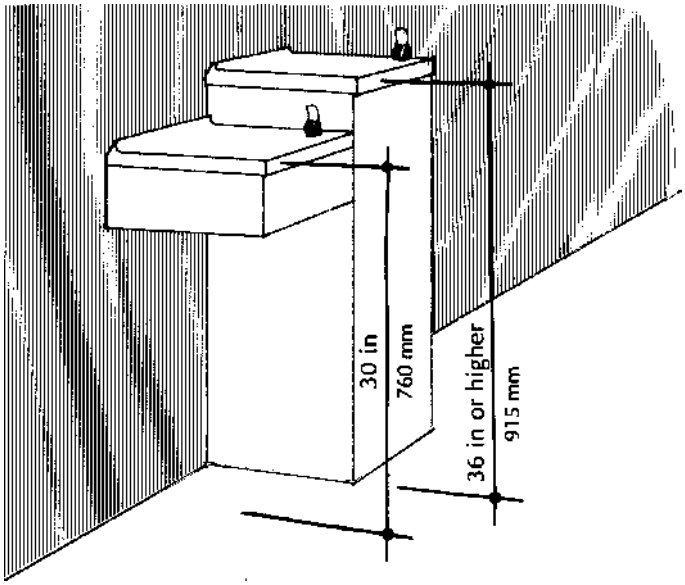

Wall- and post-mounted cantilevered fountains must have a clear knee space at least 27 inches (685 mm) high by 30 inches (760 mm) wide and 17inches (430 mm) deep underneath the apron of the unit. Fully-recessed drinking fountains are not recommended.

Where alcoves for fountains are provided, the alcove should provide adequate clearance for a close, parallel wheelchair approach as described in "Basic Human Dimension Data" on page 47. Excessively deep alcoves should be avoided.

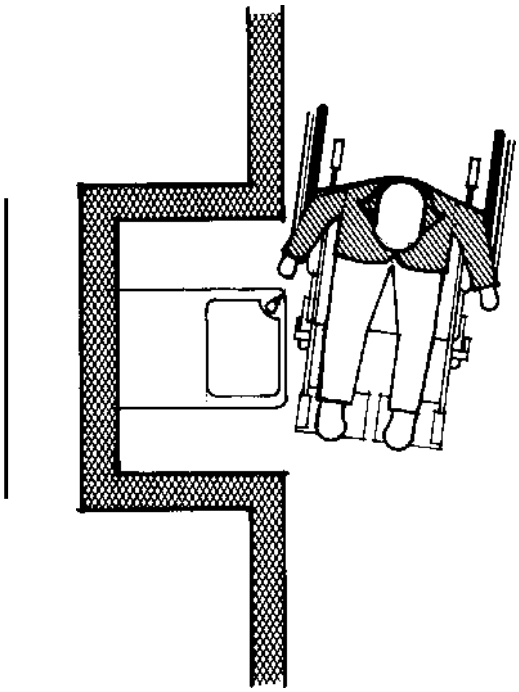

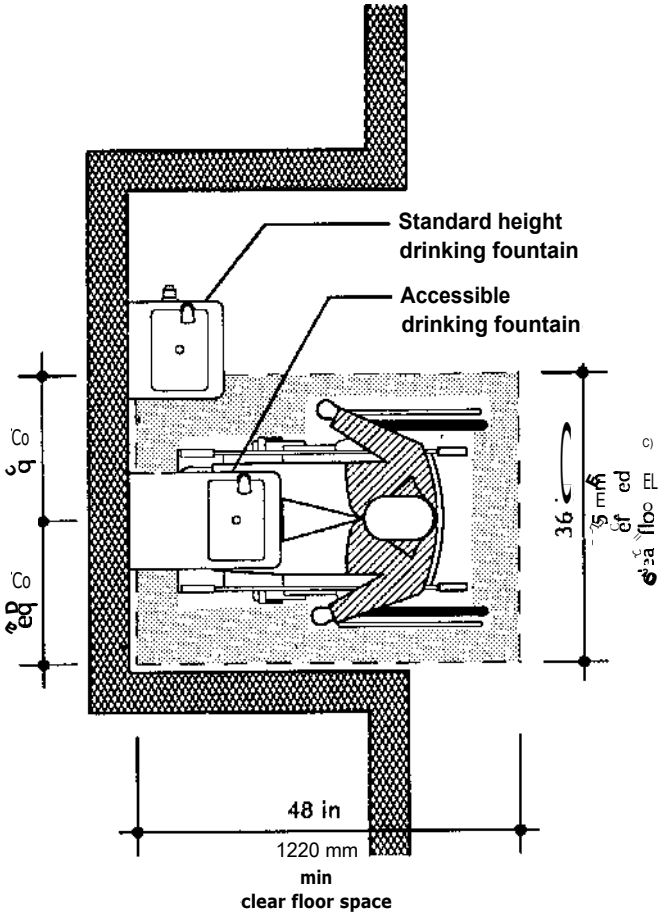

Water fountains which are located along accessible routes must follow the ADA guidelines for protruding objects outlined on page 88, or should be located in an accessible alcove.

A clear floor space of at least 30 by 48 inches (760 by 1,220 mm) should be provided in front of the fountain, regardless of mounting type.

Hand-operated controls mounted near the front of the unit or combination hand and foot controls should be provided. An up-front bubbler, with the water stream parallel to the front of the basin, can be used by most persons with disabilities.

Light Switches

Light switches located between 40 and 42 inches (1,015 and 1,065 mm) above the floor are recommended, unless they must be reached over an obstruction, in which case they should be located within the reach ranges outlined in "Basic Human Dimension Data," beginning on page 42. For convenience, no more than two switches should be located on a single plate. Switch action should be simple and positive.

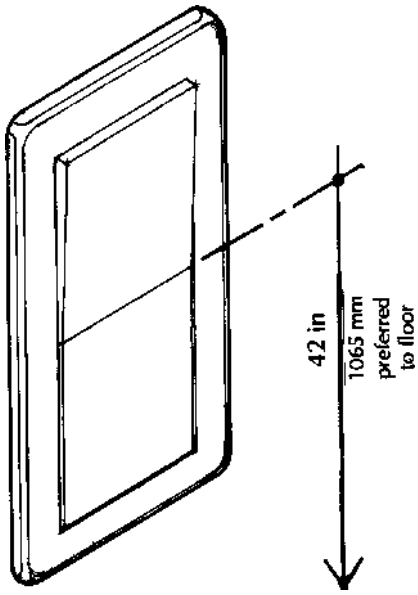

Large-area decorative-type rocker switches permit easy operation by forearms or elbows, and are strongly recommended. It is also recommended that three-way switches which allow lights to be turned on from more than one location be used whenever possible to reduce travel for people with impaired mobility. Switches should be located in appropriate places such as all room entries so that they are easy to locate and operate.

In some specialized installations, voice- or motion-actuated switches may be appropriate.

Electrical Outlets

Outlets placed 24 inches (610 mm) above the floor where they can be easily reached by people who use wheelchairs and those who have difficulty bending are recommended. Special devices such as TDDs and visual or audible alarms for people with sight or hearing impairments may require special configurations or higher voltage outlets. These should be provided in logical and code-approved locations. See the chapter, "Housing," beginning on page 126, for further recommendations.

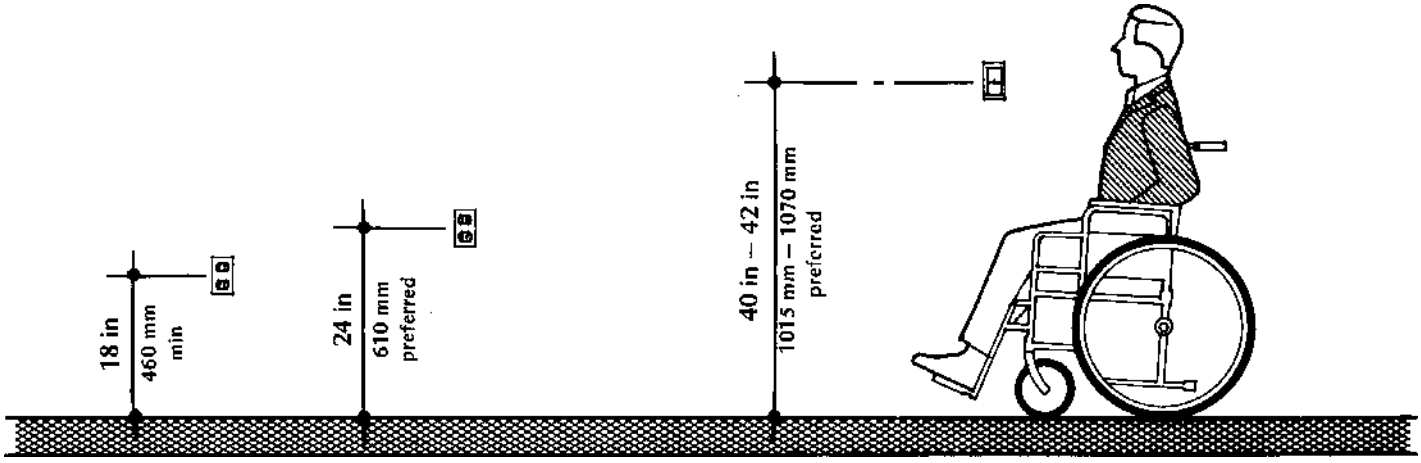

Electrical Outlets

Light Switches

Public Telephones

ADA requires that all floors of a building with one or more single public phone units as well as all banks of public telephones contain at least one telephone which is accessible for people with disabilities, including people who use wheelchairs and those who have hearing or sight impairments. ADA further requires that if more than six telephones are installed at a site, at least one text telephone be provided.

Push button instruments with larger than standard buttons and tactile markings are easier for people with poor hand function or visual impairments to operate, and are recommended over conventional rotary dial sets. Handsets must be on 29-inch (735 mm) or longer cords.

ADA requires that all accessible telephones be equipped with adjustable volume handsets to aid persons with hearing impairments. Since ADA requires that other telephones in addition to those which are wheelchair accessible be provided with such controls, it is recommended that all public telephones be provided with such controls. This feature should be prominently posted, with raised lettering and braille for operating instructions to aid persons with visual impairments.

An accessible telephone must have a clear floor space at least 30 by 48 inches (760 by 1,220 mm) in front. Telephone dials, handsets and coin slots must be located within 54 inches (1,370 mm) of the floor if a side approach to the telephone is possible, and 48 inches (1,220 mm) if only a front approach is available.

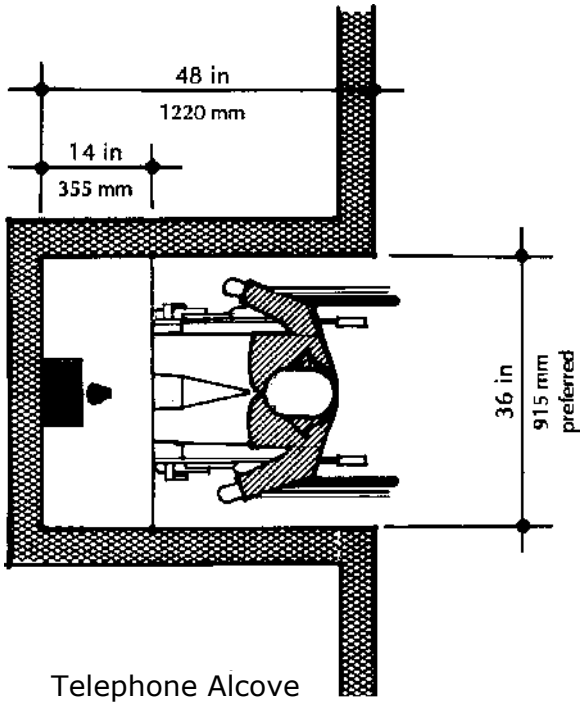

Telephone Alcove

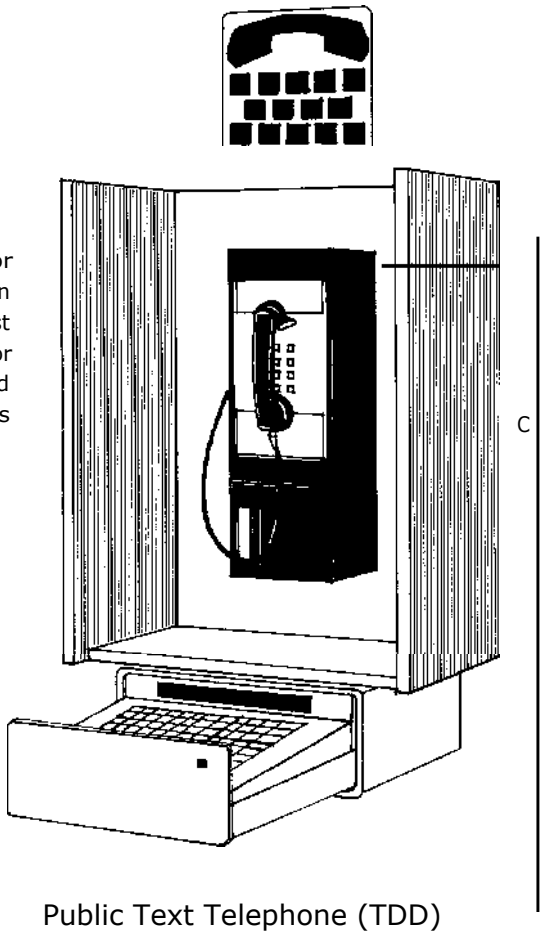

Public Text Telephone (TDD)

Outdoor public telephones should be well lit, located close to public sidewalks and streets, and be equipped as described above. Free-standing exterior booths should not protrude into major pedestrain paths because of possible danger to people who are visually impaired.

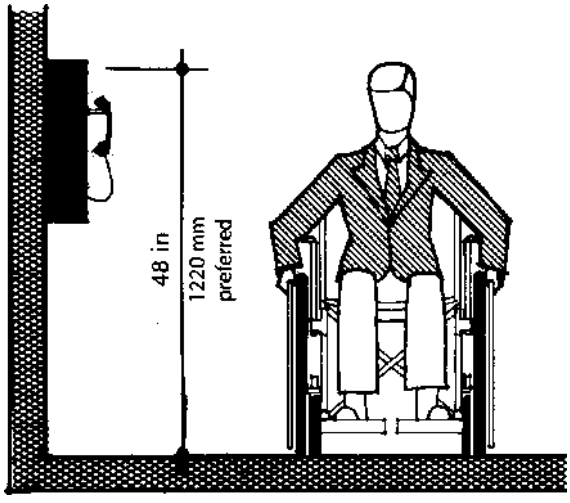

Telephone Height

Miscellaneous Controls

Window operating cranks and levers, drapery and shade controls, intercoms and thermostats located between 36 and 48 inches (915 and 1,220 mm) from the floor are recommended. Care should be taken to locate controls away from corners and to avoid placing controls over counters, since these locations are particularly inconvenient for persons using wheelchairs.

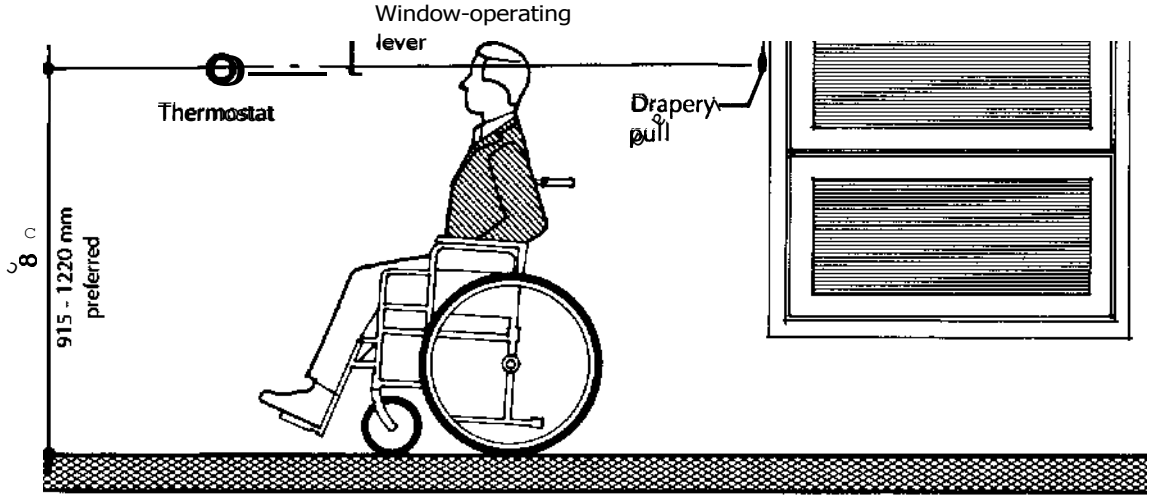

Vending Machines

It is recommended that operating controls on vending machines be located between 24 and 48 inches (610 and 1,220 mm) above the floor. Pull knobs, where used, should not require more than 5 pounds (22.2 N) of tension to pull.

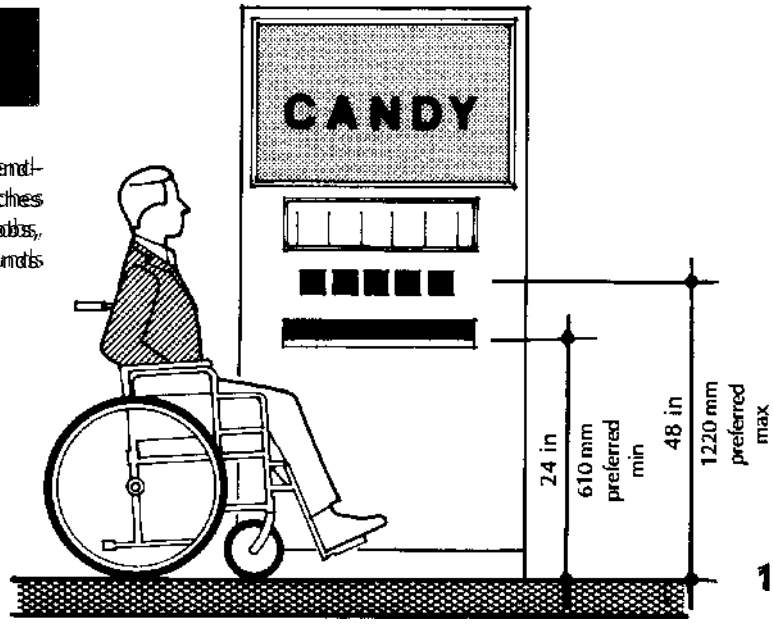

Vending Machines

Fire Extingui and Alarms

Extinguishers and fire alarm boxes should be wall-mounted within reach of people who use wheelchairs. In general, the recommended height for such devices is between 36 and 48 inches (915 and 1,220 mm) above floor level.

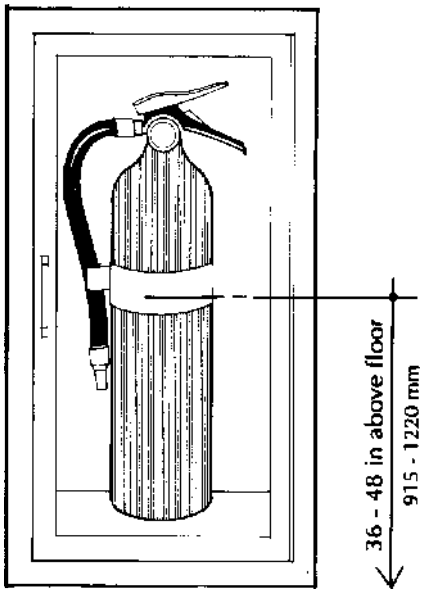

Some of these devices are governed by special codes which address the needs of people using wheelchairs, and may be more restrictive than ADA. For example, NFPA requires that the top of a fire extinguisher be located no higher than 60 inches (1,525 mm) above the floor if it weighs 40 lbs or less; and no higher than 42 inches (1,065 mm) if the extinguisher weighs more. The bottom of an extinguisher should never be lower than 18 inches (455 mm) above the floor so that a person with limited strength using a wheelchair can remove it from its bracket or cabinet. If a fire extinguisher is enclosed in a wall-recessed cabinet, doors and hardware which can be easily operated by people with physical impairments should be selected.

Manual pull-station fire alarms should be easily operable by people with limited hand functions. Pull-station handles are designed to require a deliberate action to engage the alarm, and thus are not extremely easy to operate. Slide-type handles which do not require as much grasping as pull-type handles are recommended. Of course, the easier it is for people with disabilities to operate an alarm, the easier it will also be for children or vandals to set off, especially if it is located within accessible reach ranges. If a large number of false alarms are expected in a particular facility, a station with reduced accessibility may need to be used.

ADA requires that all emergency warning systems such as fire alarms include audible and visual signals. ADA clearly outlines where such alarms must be located and includes specifications for audible and visual signals. In large buildings such as office complexes or multi-family housing projects, auxiliary outlets which are connected to the building's emergency warning system may be provided. These receptacles would become active only upon activation of the emergency system, and would provide a location in which to plug a variety of personal warning devices.

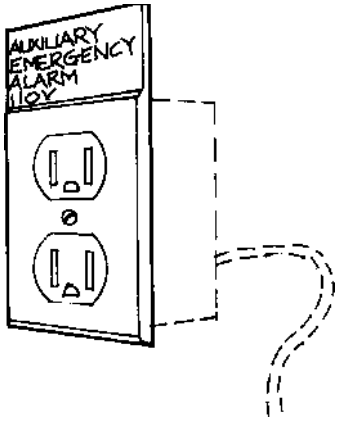

Interior Signage

Signage for identification, information and direction which is usable by all persons, including those with visual impairments, is required by ADA. ADA provides comprehensive guidelines on signage elements, which are outlined below. The ADA Accessibility guidelines should be consulted for more detailed information.

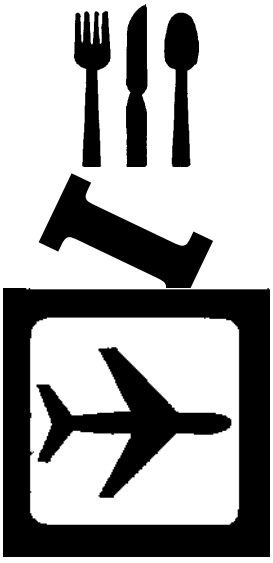

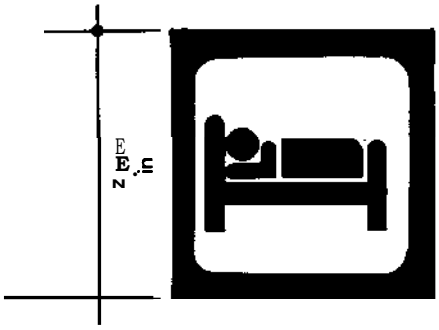

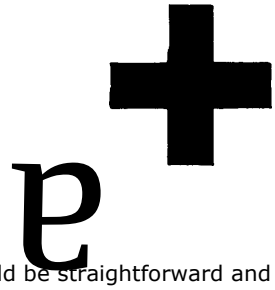

Raised lettering should be used in addition to braille, since many people with visual impairments do not read braille and rely upon touch reading. Letters must be a minimum of 5/8 inch (16 mm) and a maximum of 2 inches (50 mm) high; they should project 1/32 inch from the sign face.

Lettering styles should be straightforward and legible. Upper case letters in a sans serif or simple serif typeface and grade 2 braille should be used for all signage, including tactile signage.

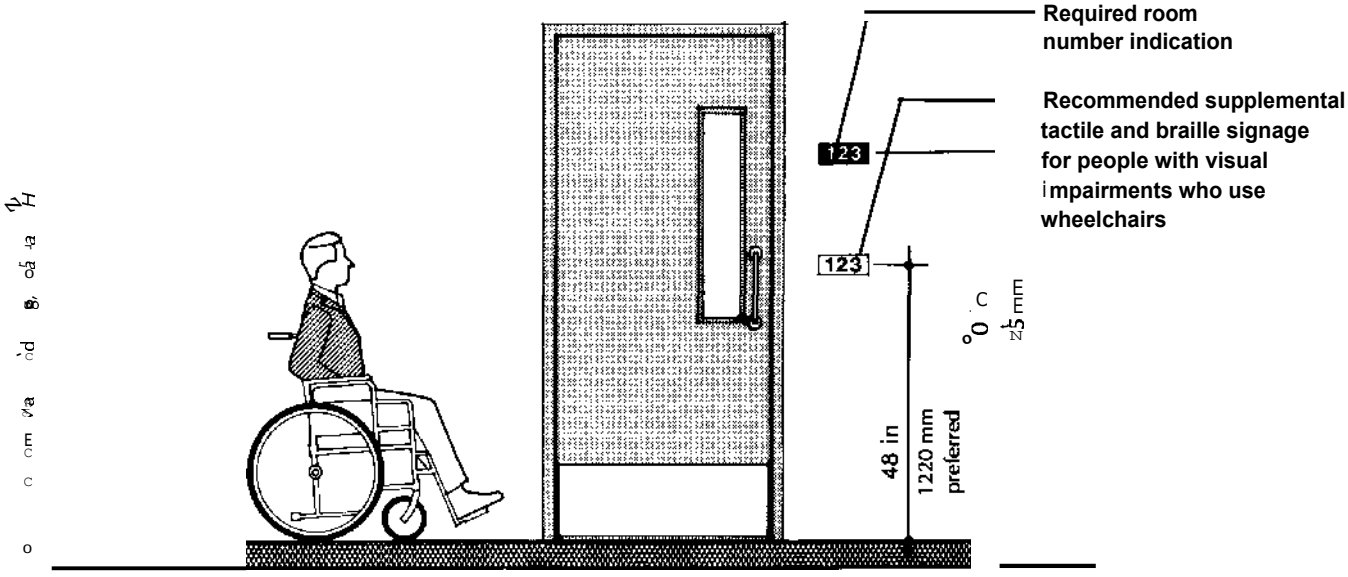

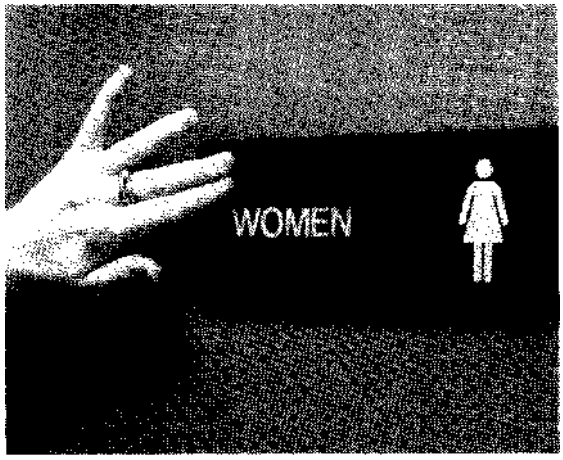

Signage legibility is enhanced by the use of proper color combinations. Contrasting color values between lettering and background, such as light lettering on a dark background, provides maximum contrast and is preferable; however, dark lettering on a light background may also be used. It is difficult for persons with partial sight disabilities to read signs which have letters on a background of similar value. Non-glare finishes are also required.

Information conveyed by signs should be as concise and direct as possible. Graphic symbols are efficient for transmitting information to sighted individuals, but such symbols should be accompanied by tactile word signage and braille, as described above, to aid persons with visual impairments. Graphic symbols or pictographs should be 6 inches (152 mm) high.

The use of tactile signage by people with sight impairments depends upon two factors: location of signs in "standard" places so they may be found easily; and location of sign faces so they can be easily touched by a reader's hand. Permanent room and space identification should be installed on the wall adjacent to the latch side of a door or on the nearest adjacent wall if sufficient space is lacking on the latch side. Raised or incised and braille letters should be mounted 60 inches (1,525 mm) above the floor.

The International Symbol of Access should be employed to identify new buildings, remodeled buildings, building entrances, rest rooms and other facilities which are accessible. See Appendix IV for guidelines for using this symbol.

ENDNOTES

1. ANSI A117.1 1986 requires a handrail height between 30 and 34 inches (760 and 865 mm); ADA requires a height of 34 to 38 inches (865 to 965 mm). A height of 34 inches (865 mm) is therefore recommended because it satisfies both sets of standards.
2. The *ADA Accessibility Guidelines,* published July 26, 1991, reserved Section 4.9.5 for detectable warnings at stairs. It is recommended that designers watch for amendments or updates which address this issue.
3. See ENDNOTE 1.
4. Thomas D. Davies, Jr., AIA and Kim A. Beasley, AIA, *Design for Hospitality: Planning for Accessible Hotels & Motels* (New York: Nichols Publishing, 1988), p. 129.
5. Ibid., p. 130.
6. ADA allows shower seats to be installed between 17 and 19 inches (430 and 485 mm) high. A height of 17 inches (430 mm) is recommended because it is useable by most people with or without wheelchairs.

Housing

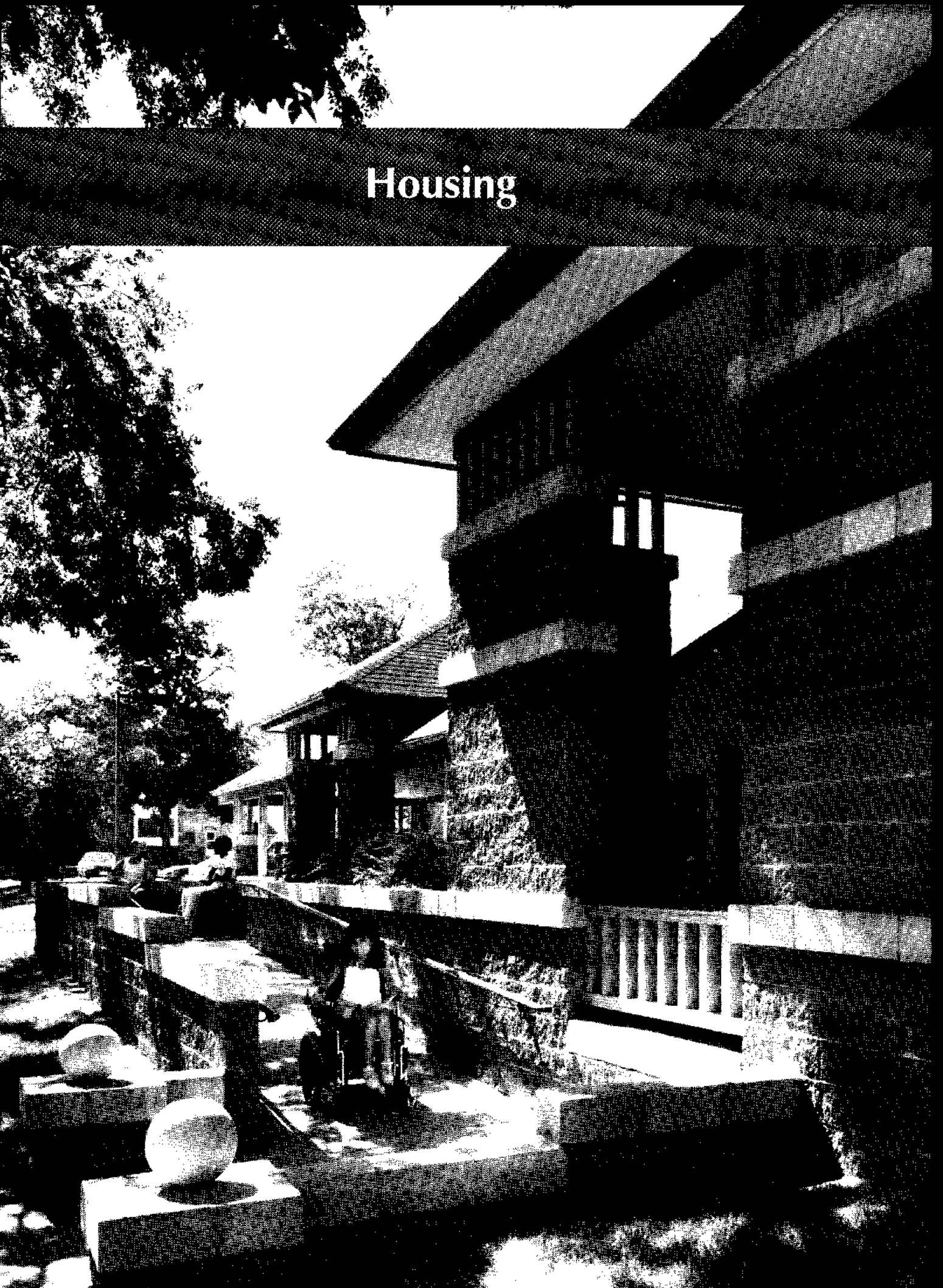

Housing

The ultimate goal of accessible housing should be to increase the independence of people with disabilities. This goal can be accomplished by removing physical barriers which may prevent persons with disabilities from choosing, using and occupying their homes with the same freedom as those without disabilities.

All single-family or multi-family apartment and condominium housing projects should be designed to be as barrier-free as possible. Dwellings should be designed to accommodate residents as their needs change; as they age; or if they become disabled, either temporarily or permanently. Housing which can meet such a variety of needs will necessarily be flexible. This flexibility is the concept behind adaptable housing, or dwellings which are designed so that changes to meet total wheelchair accessibility criteria can be easily made after original construction because potential changes were anticipated and allowed for during the original design process.

The federal Fair Housing Amendments Act (FHAA) of 1988 requires that all multi-family projects with four or more dwelling units have at least one accessible entrance and accessible doors and public or common areas. Dwelling units must be adaptable to total wheelchair accessibility; this includes all units if the project includes elevators, and ground floor units if the project does not. Some local regulations require that a certain number of units be specifically designed to accommodate persons using wheelchairs. In Ohio, Section 175.13 of the Ohio Revised Code requires that one in 20 units in state-financed housing projects be constructed to meet ANSI standards.

Since the FHAA **adaptability requirements** cover a significant percentage of the dwelling units on the market, it is recommended that all units be **adaptable.** There are several advantages to making all dwellings adaptable. If flexibility is engineered into the units from the start, they can be modified to suit a variety of disabilities, not just those which require use of a wheelchair; in this case, the costs of modifying specific units will be minimal. Another advantage is that 100 percent **adaptability** encourages the integration of fully-accessible units, and therefore people with disabilities into the project, rather than isolating or segregating them. At the very least, whole project adaptability will afford persons with disabilities the same unit location choices as persons without disabilities.

Most of the suggestions for increased accessibility proposed in this section also apply to the design or modification of single-family homes. In new construction, it is recommended that all single-family homes be adaptable, although this is not required by FHAA. If new construction or major renovation to an existing single-family home is not feasible, then the suggestions in this section can be used as a type of "checklist" to evaluate the potential accessibility of a dwelling.

The photo on the preceding page is by Wayne Cable, Cable Studios, Inc.

Location

Location can be a critical factor to allow independence for people with disabilities or the elderly. Particularly important is proximity to public transportation. Many cities provide, or plan to provide in the near future, special buses equipped with audio/visual signals, wheelchair lifts or special "kneeling" buses which allow easy access for the elderly and others with mobility impairments.

Neighborhood accessibility is a very important factor in choosing a home or project location. Curb cuts should be provided at necessary locations. Primary routes should be made accessible. Pedestrian routes should be paved with a hard surface and adequately separated from vehicular traffic. Educational, recreational and commercial areas adjacent to the property should be accessible. Medical or special services for the elderly and people with disabilities should be located nearby.

Adaptable Housing

It is strongly recommended that all single- and multi-family housing be adaptable, whether required by FHAA or not. The FHAA adaptability requirements are really quite minimal, and they will create units which are easier for all people to use. The FHAA requirements are outlined on the following pages, along with other guidelines which will allow units to be adapted for people with a variety of disabilities.

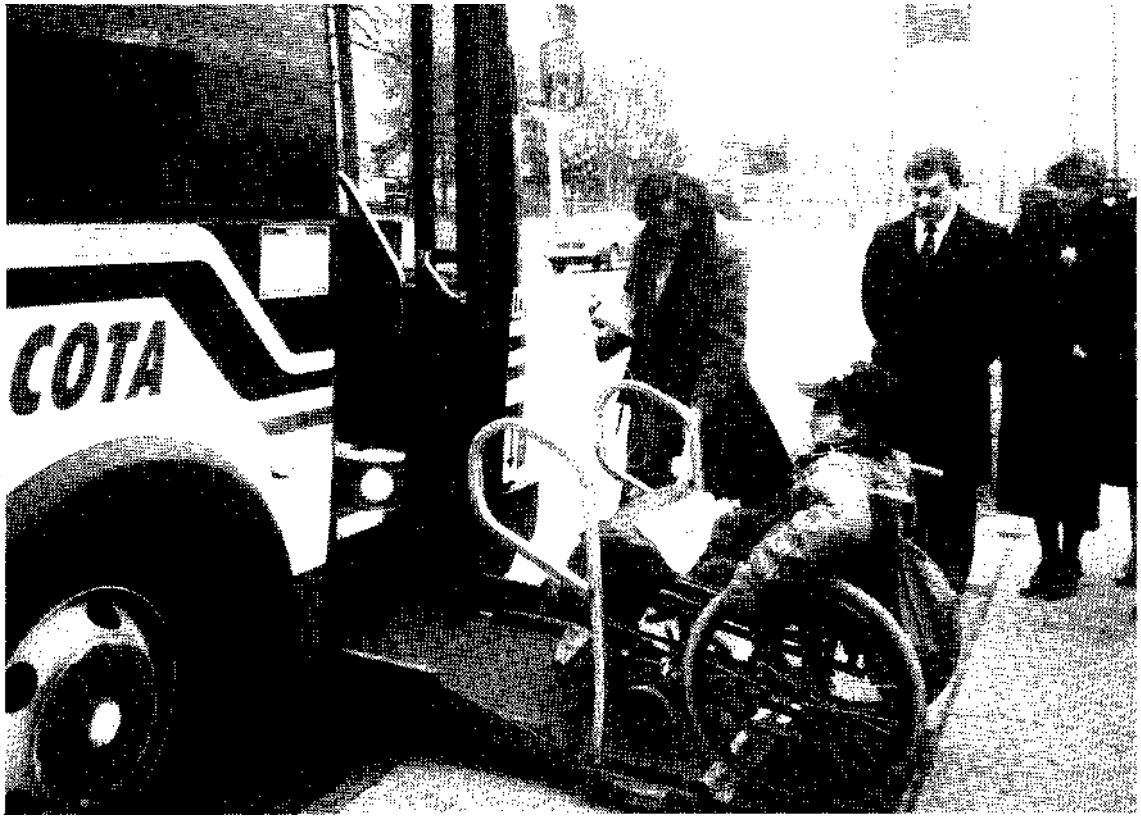

Courtesy of Central Ohio Transit Authority

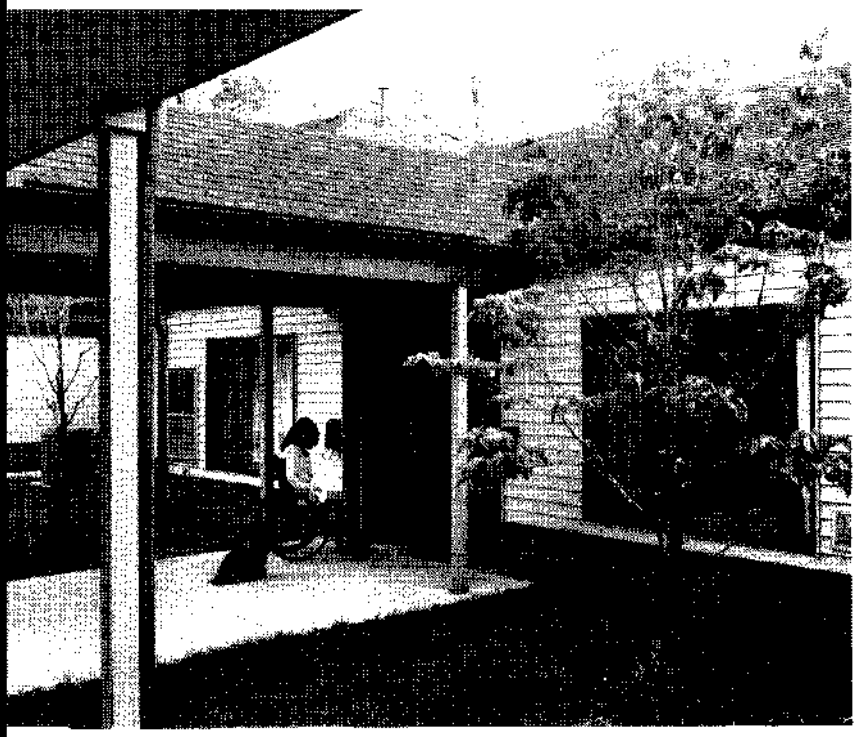

Wayne Cable, Cable Studios, Inc.

Entrances

All housing projects which are required to comply with FHAA must have at least one accessible building entrance on an accessible exterior route. The entrance must have an accessible door and adequate maneuvering clearance. The accessible exterior route must connect to public transportation stops, accessible parking, passenger loading zones, and public streets and sidewalks. The accessible entrance must lead to an interior accessible route which connects all public and common use areas and all entrances to accessible units.

Unobstructed and direct unit entrances maximize accessibility. Whenever possible, buildings should be sited so that the difference in grade between the entry and vehicular parking, drop-offs or streets and sidewalks is minimal. Where changes in grade are unavoidable, the most accessible route for everyone is a walk which slopes gently up to the entrance (a maximum slope of 1:20, or 5 percent). It is recommended that entrance doors be protected from extreme weather, and there should be no step at door sills.

Entrance porches, covered landings or interior vestibules must include adequate room to allow a wheelchair to turn. If an entry door opens outward, space for the door swing must be added to the landing dimensions. Information on minimum and recommended entrance door and maneuvering clearance dimensions can be found in the section, "Doors and Doorways," beginning on page 80.

Security has become an increasingly important issue in all housing, but it can be a critical one for people with mobility or sensory impairments, because they are especially vulnerable to crime. Well-lighted entrance doorways increase security for everyone. Wide-angle security viewers, or "peep sights," installed 44 inches (1,120 mm) above the floor are usable by people in wheelchairs. Dead bolts and security locks, if provided, should be mounted no higher than 42 inches (1,065 mm), and should be easy to operate by those with visual or hand function impairments, especially in emergency situations.

Large, raised numerals for address identification are recommended on the exterior.

Doors

FHAA requires that all doors in an accessible unit be sufficiently wide to allow passage by people using wheelchairs. Detailed requirements for accessible doors, including maneuvering clearances, can be found in the section, "Doors and Doorways," beginning on page 80.

Spatial arrangements which emphasize open areas and include doors on bedrooms and bathrooms only are recommended. If entrances to bedrooms and baths are properly screened, doors may be removed altogether, except where necessary for the comfort of visitors in guest bedrooms or baths.

Accessible Rout

Distance itself can become a barrier for anyone with limited mobility or sight. Organizing the basic living areas of a residence—the kitchen, bath, bedroom and public areas—in a logical progression with close proximity to one another benefits everyone.

FHAA requires that accessible dwellings have an accessible route into and through each unit. Requirements and recommendations can be found in the section, "Accessible Routes," beginning on page 86.

The amount of hallway space in a unit can be minimized through open planning, but any required halls should be at least 36 inches (915 mm) wide. Hallways with a width of 48 inches (1,220 mm) or more will result in a dwelling which is more convenient for all people.

Adequate lighting is essential, and three-way switches at the hallway entry and near the master bedroom are recommended.

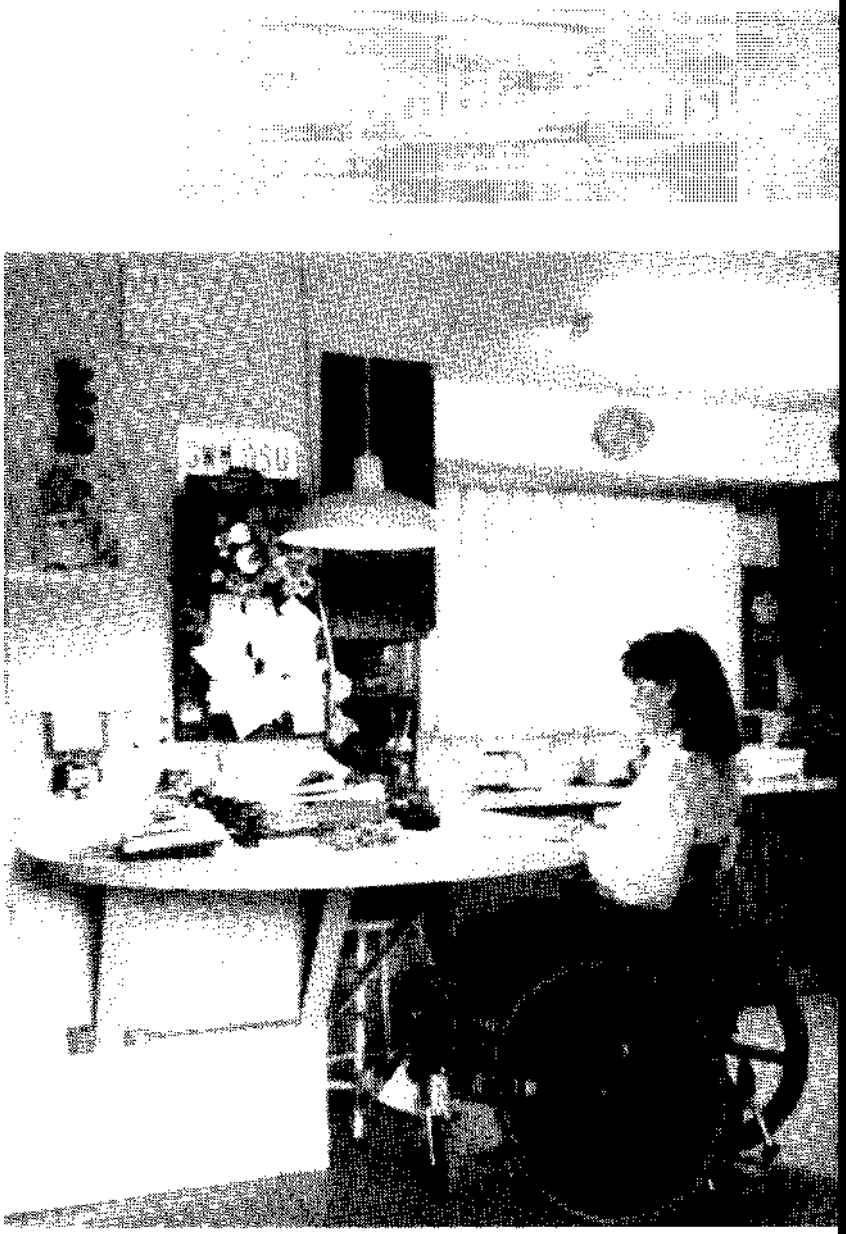

Living-Dining Areas

Living-dining areas which allow flexibility in use and furniture arrangement increase options for people with a variety of disabilities. Diagonal traffic paths through living rooms can be confusing for people with visual impairments and difficult for people using wheelchairs to negotiate. Level changes between rooms should be avoided unless adequate space is available for creating a ramp. FHAA allows certain elements such as lofts or sunken living rooms to be inaccessible in certain situations, but it is recommended that these elements be avoided unless they are pre-existing conditions.

An open arrangement of public areas is preferable in terms of access; however, some thought should be given to visually screening the areas from one another to give the impression of separation. An attempt should be made to provide at least one area in each residence from which a seated person can see, hear and control most of the residence. Room sizes and shapes should be planned according to standards of good practice or local code requirements, with additional space as necessary to allow for wheelchair maneuvering clearances. Any rooms with only a single entry door should allow a 60-inch (1,525 mm) turning radius for a wheelchair.

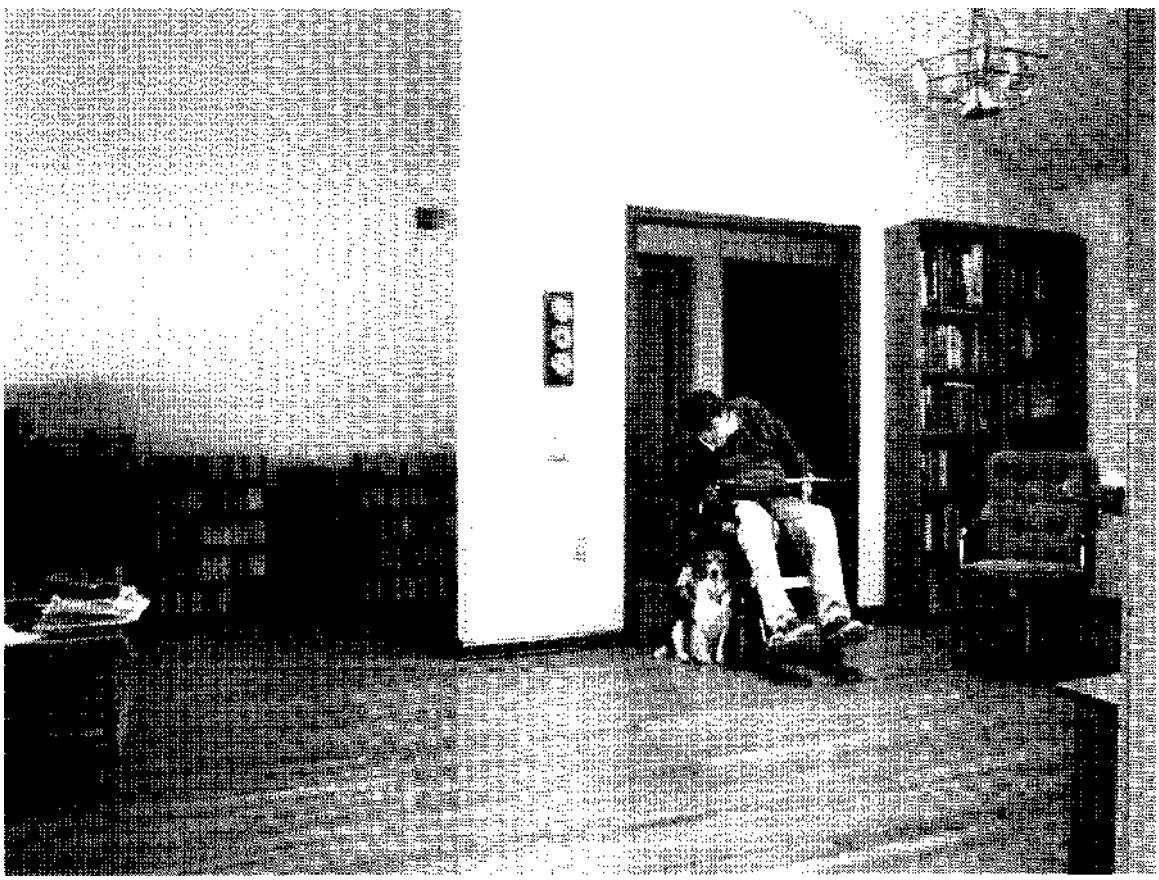

Kitchens

FHAA requires that adaptable dwellings have a kitchen which provides adequate space for wheelchair maneuvering. Minimally, the kitchen must provide space in front of a standard range, cooktop and sink that allows a parallel approach by a wheelchair. Space for either a parallel or front approach must also be provided at other appliances. If the kitchen is U-shaped and has a major appliance (cooktop, sink or range) at the base of the U, then space must be provided for a 60-inch (1,525 mm) turning radius in the kitchen.

Alternatively, a U-shaped kitchen may have removable base cabinets under the appliances to allow knee space for a forward approach. Kitchens which are not U-shaped are only required by FHAA to have a distance of at least 40 inches (1,015 mm) between the counters, although 48 inches (1,220 mm) is preferred.

It is recommended that all kitchens be planned to maximize reachable storage space and allow sufficient floor space for wheelchair turnaround. Open kitchens can increase mobility throughout the public areas of a unit. Appliances which are organized for work efficiency and convenience will benefit everyone.

A counter height of 34 inches (865 mm), which is only 2 inches (50 mm) lower than the standard 36 inches (915 mm), is useable by people with and without disabilities. It is recommended that most of the counter be installed at 34 inches (865 mm), with standard height sections where necessary to accommodate dishwashers or standard ranges, if they are provided. Adjustable counters are highly recommended. An inexpensive method of providing a range of worktop heights is through a series of pull-out boards or counters, although such items may not be covered in some publicly-funded housing projects.

Pull-out Cutting Board

Provides a 34 to 34-1/2 inch (865 to 880 mm) high work surface.

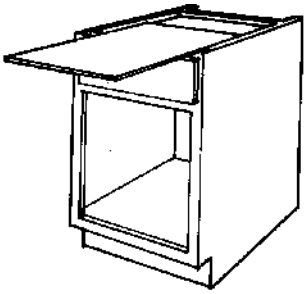

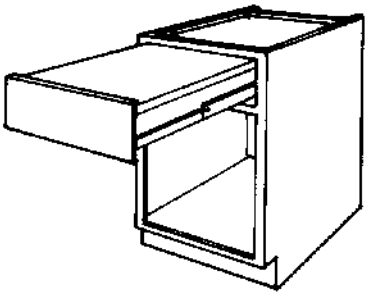

Pull-out Knife Drawer with Cutting Board

Provides a 32-1/2 inch (830 mm) high work surface.

Pull-up Mixer Shelf

Provides a 27 to 28 inch (685 to 710 mm) high work surface.

Note: This may not provide the required 27 inch (685 mm) knee space, but it will provide a lowered surface which can be used by most people in wheelchairs.

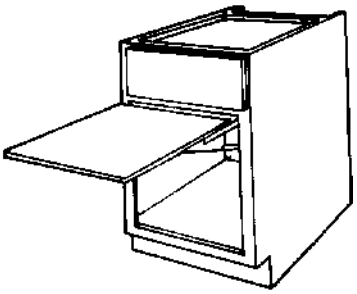

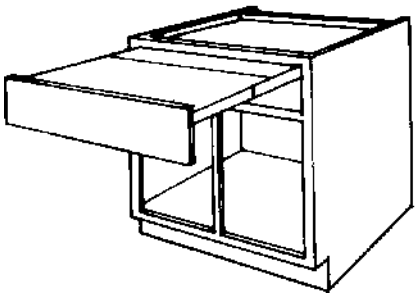

Pull-out Table Top
Provides 31 1/2 to 33 inch (830 to 840 mm) high work surface.

NOTE: *All heights are based on standard 34-1/2 inch (880 mm) high base cabinets which create a 36-inch (915 mm) high surface when topped with a counter.*

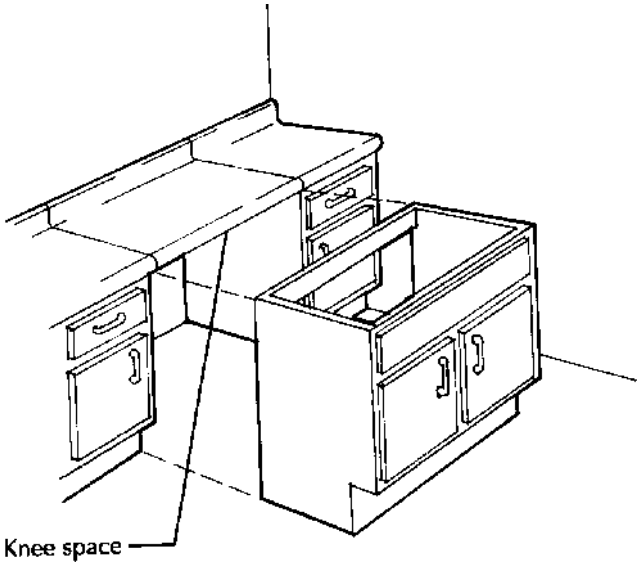

Removable Cabinets

Base cabinets should be removable where necessary to provide required knee space and maneuvering clearances. Whenever possible, at least one 36-inch (915 mm) long section of work counter with removable base cabinets in the sink area should be provided. The highest storage shelf should not be more than 54 inches (1,370 mm) above the floor, and extra storage should be available to compensate for potential loss of undercounter storage.

Bathrooms

FHAA requires that adaptable dwellings have bathrooms which provide adequate maneuvering space fora person using a wheelchair to enter and close the door, use the fixtures, reopen the door, and exit. Clear floor space at each fixture must comply with the minimums outlined in the drawings below. Finally, bathroom walls must be reinforced around commodes, tubs, and showers to allow for future installation of grab bars, as necessary.

It is recommended that maneuvering space be provided in an adaptable bathroom to allow an unobstructed 60-inch (1,525 mm) turning radius.

A bathroom door which opens outward facilitates access and movement within the rooms and prevents the possibility of a person being trapped in the room. A door which opens inward may be used only if a clear space at least 30 by 48 inches (760 by 1,220 mm) is available for a person using a wheelchair to be positioned clear of the door while opening it. It is recommended that all bathroom doors be 36 inches (915 mm) wide and provide a clear opening of 34 inches (865 mm).

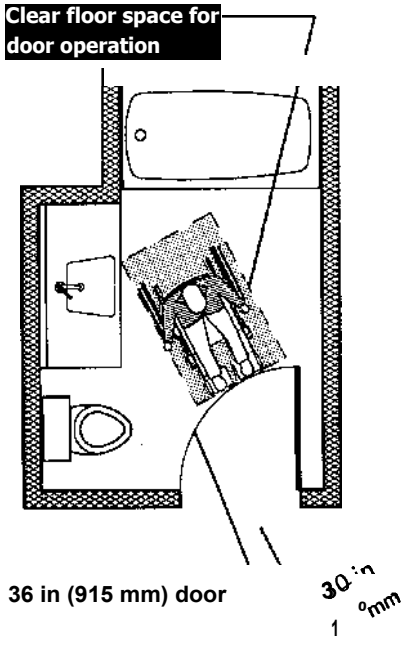

Although FHAA allows various configurations of clear floor space around toilets, 60 by 56 inches (1,525 by 1,420 mm) is recommended. The center of the toilet should be located 18 inches (455 mm) from a side wall for future grab bar placement. This arrangement will allow the most flexibility in transferring between a wheelchair and a toilet.

The lavatory in an adaptable bathroom should follow the minimum clear floor space requirements outlined in the section, "Lavatories," beginning on page 110. It is recommended that the vanity top be self-supporting and the base cabinets removable in order to provide knee space for a person using a wheelchair. If this knee space is provided, it should conform to the recommendations outlined in the same section.

If the required knee space cannot be provided, the 48-inch (1,220 mm) clear floor space dimension must be provided parallel to the sink.

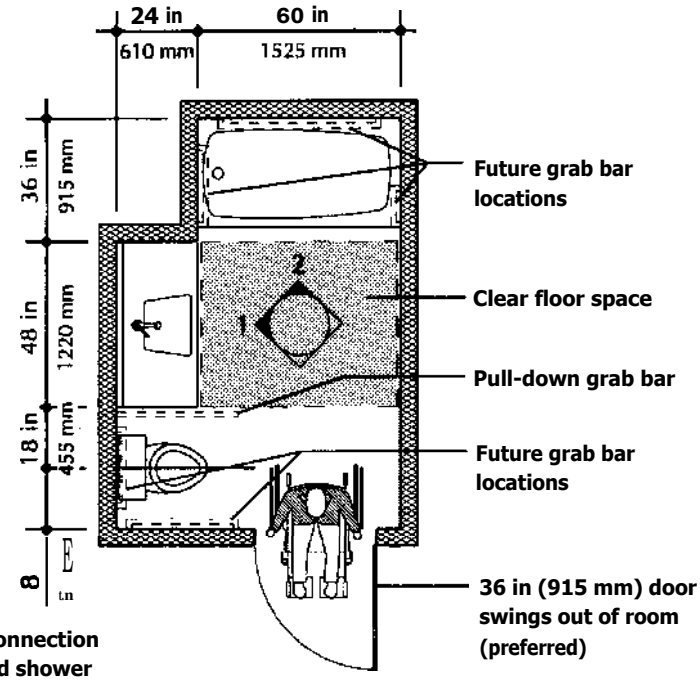

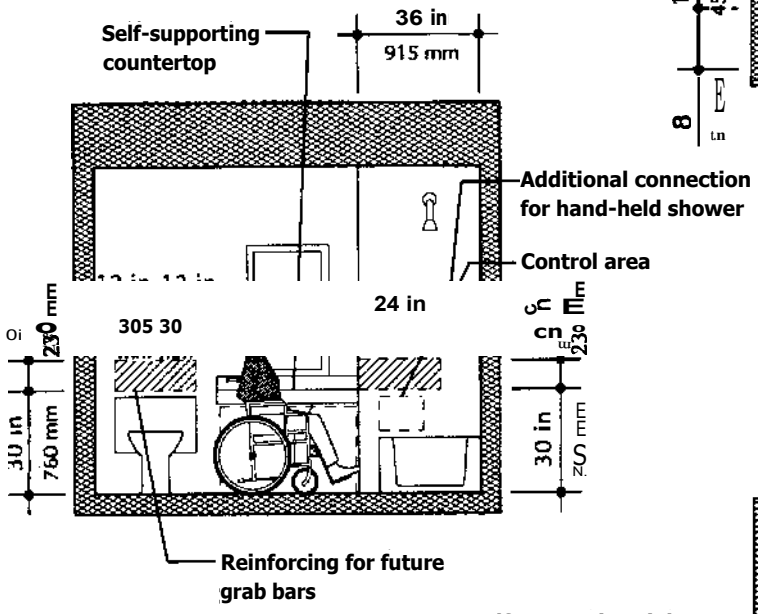

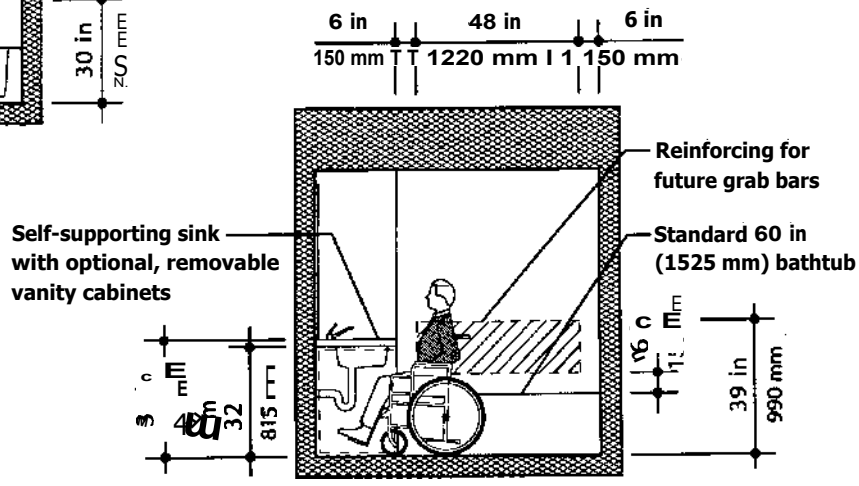

Front Approach

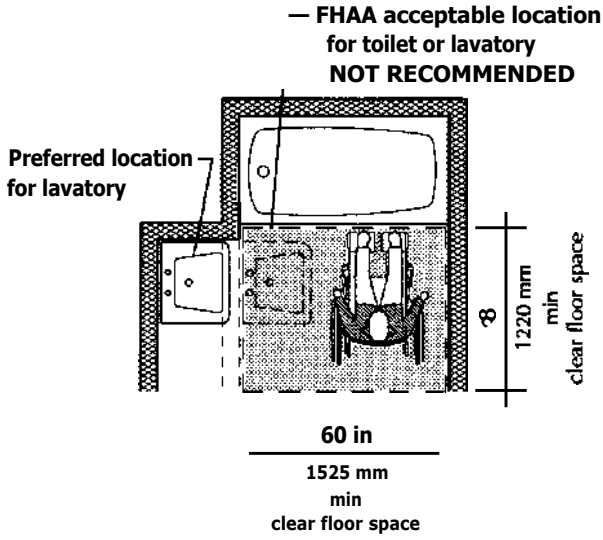

Parallel Approach

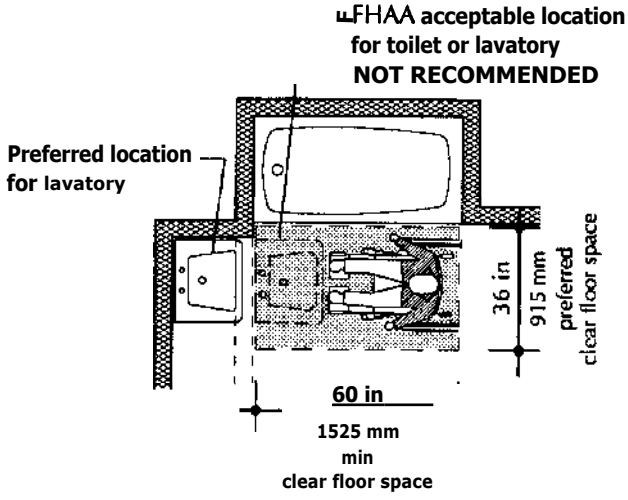

Preferably, both an accessible bathtub and a shower stall will be available within each dwelling, as people with disabilities have a variety of limitations which restrict the type of bathing fixture they can utilize. FHAA requires that at least one bathing fixture, either a shower or tub, be accessible. For bathtubs, it is recommended that a 48-inch (1,220 mm) wide floor space along the length of the tub – which is usually 60 inches (1,525 mm) long – and clear of all fixtures be provided.

It is recommended that all dwellings provide at least one roll-in shower stall, 36 by 60 inches (915 by 1,525 mm), since this type of shower can be used by everyone. The required clearances for such a shower can be found in the section, "Shower Stalls," beginning on page 113. FHAA allows the use of a 36-inch (91 5 mm) square shower stall, but requires that reinforcement be provided for future seat installation.

An adaptable bathroom which is wired to accept a variety of power and electrical devices including a telephone, TDD and visual and audio signals increases safety. Such devices may be used in an emergency situation by people with a variety of disabilities.

In two-story dwellings, a full, adaptable bath should be provided on the first floor adjacent to a bedroom or other room which could become a bedroom if necessary.

Finishes

Baseboards, doors, and door and window frames which are painted to contrast with surrounding wall and floor colors will increase visibility and safety for all residents, especially people with limited vision.

In addition, rounding off sharp corners on countertops, handrails and grab bars can help avoid accidents that happen to anyone.

Conveniences and Controls

FHAA requires that all environmental controls be located at an accessible height somewhere between 15 and 48 inches (380 and 1,220 mm) above the floor, and be centered in a 30 by 48 inch (760 by 1,220 mm) clear floor space.

Electrical outlets and wall switches should conform to the requirements for such devices as outlined in the sections, "Light Switches" and "Electrical Outlets," on pages 118 and 119.

Thermostats, window and drapery operating controls and wall telephones can all be located for access and use by everyone as outlined in the section, "Conveniences and Controls," beginning on page 116. Controls should not be located in inaccessible corners, and should be easy to see and operate by those who have limited hand function or vision.

It is recommended that every dwelling or unit be equipped with an audible and visual alarm or doorbell, or at least contain outlets capable of powering a personal emergency warning device. For more information, see the section, "Fire Extinguishers and Alarms," on page 122.

Closets

Adjustable shelving is convenient for everyone. Shelf heights between 15 and 54 inches (380 and 1,370 mm) above the floor must be provided so that storage rooms or areas are accessible for people using wheelchairs. Closets equipped with adjustable hanging rods and shelves are ideal because they can be reorganized to suit a variety of needs.

Sliding doors allow access to half of a closet, but access to the other half is restricted by the by-passing doors. The best solution is to install either double swinging doors or bifolds which swing or stack against the wall, away from the opening.' It should be noted that bifold doors can significantly reduce the clear opening of a doorway. The door opening size should be increased as necessary to ensure a clear opening of 32 inches (815 mm) when bifolds are used.

Walk-in closets, if provided, should be large enough to become "roll-in" closets. Space within the closet for a 60-inch (1,525 mm) turning radius, with 12 inches (305 mm) or less of this radius under the clothing, will allow convenient access for people in wheelchairs.

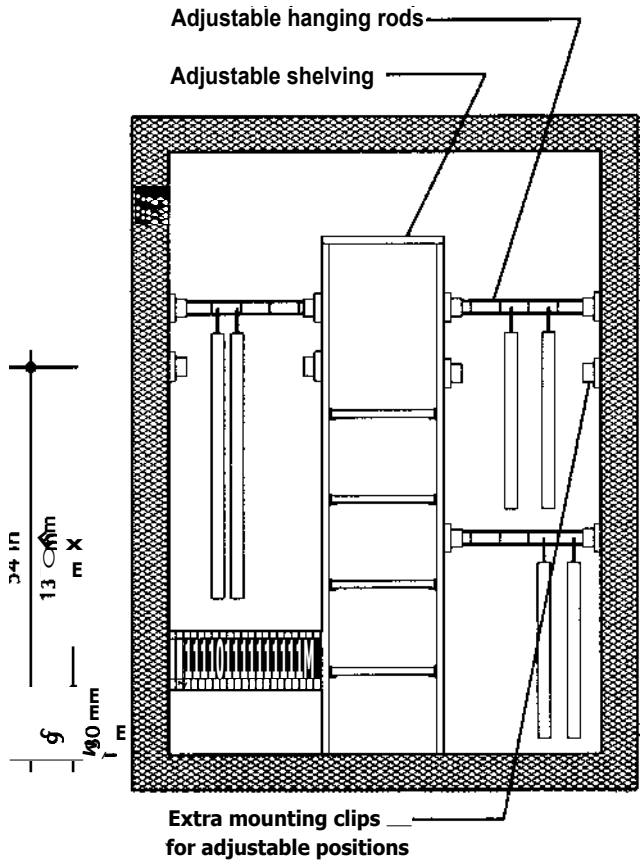

Vinyl-coated wire closet systems are a relatively inexpensive way of providing adjustable rods and shelving in a closet. Other, more expensive, custom closet organizers are available.

Fully-Accessible Housing

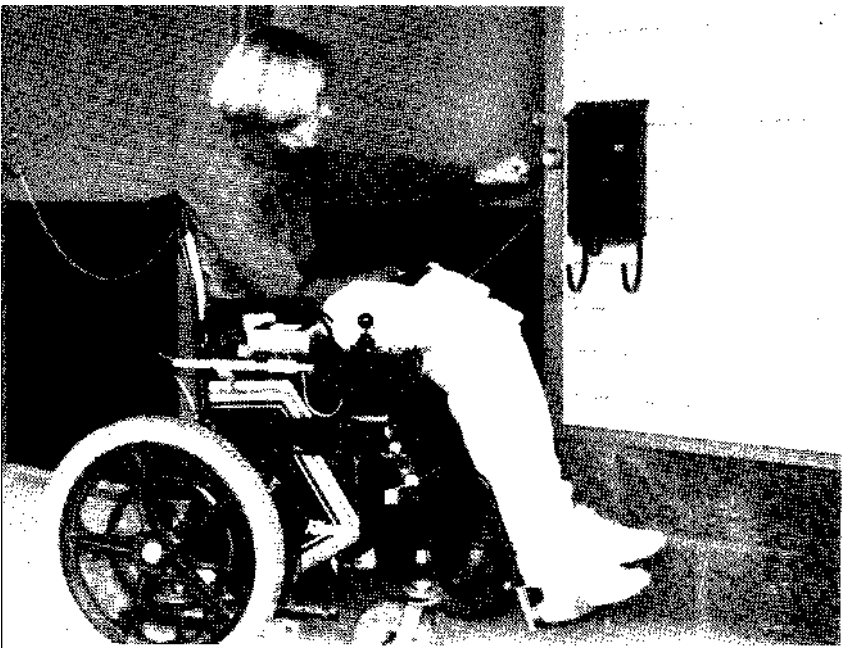

At least one unit in twenty (or a minimum of one) of a state-financed multi-family housing project is required by Ohio laws to be designed for total wheelchair accessibility. Other, separate units are recommended for persons with visual or auditory impairments.

The criteria that follow focus on the residential requirements for people using wheelchairs and include suggestions for people with other types of disabilities.

Entrances

Fully accessible housing should have at least one entry on each level which conforms to the guidelines for adaptable housing entrances. Door size, hardware and maneuvering clearance should be provided as outlined in the section, "Doors and Doorways," beginning on page 80.

Circulation

A fully accessible dwelling should have an accessible route which connects the entry to all areas of the home. Hallways and other circulation spaces should be designed to allow wheelchair maneuverability. Minimizing corridors through open planning benefits everyone. When hallways are unavoidable, they should conform to the requirements outlined in the section, "Accessible Routes," earlier in this chapter.

A generous travel route between the kitchen and dining area allows room for people in wheelchairs serving meals.

Kitchens

It is very important that a kitchen designed for a person with a disability emphasizes flexibility. All cooks, with or without disabilities, have individual cooking styles and preferred systems for organization. Cooks with disabilities develop unique cooking procedures based on the limitations of their senses, strength, mobility and reach.' Careful planning can create a new or remodeled kitchen suitable for use by cooks with a variety of abilities.

Providing adequate maneuvering space and installing features within designated reach ranges are key issues in the design of a kitchen for people with disabilities.'

A kitchen which opens to other areas such as dining or living rooms will significantly increase the mobility of a person with a disability. In all cases, a narrow galley or corridor-type kitchen should be avoided, as it can create a dead end which could entrap or require awkward maneuvering by a person using a wheelchair. It is recommended that a clear space be provided to allow a 60-inch (1,525 mm) turning radius in all kitchens, regardless of layout.

In addition to the 60-inch (1,525 mm) turning radius, a clear floor space at least 30 by 48 inches (760 by 1,220 mm) must be provided at each appliance for either a parallel or perpendicular approach. All of these clear floor spaces may overlap with each other and the turning radius. If space is limited, portions of the maneuvering clearances may be located under counters which have adequate clear knee space.

Countertops and Work Surfaces

The "ideal" working height for a kitchen counter is largely a matter of personal preference. Standard 36-inch (915 mm) counter heights are usually too high for people seated in wheelchairs. Seated people will prefer counter heights ranging from 30 to 34 inches (760 to 865 mm), depending on the height of their chair arms. These heights will also be comfortable for standing cooks who are short, but may be too low for taller people. Seated people will also benefit from the provision of clear knee space under certain counter sections. This space allows people who must sit while performing kitchen tasks to pull up under the work surface and sit close enough to reach items and work comfortably. In some cases, clear knee space will make standard-height counters accessible for people who are seated.

Richard K. Loesch, CAM-TECH Photography

Consideration should be given to providing countertops and work surfaces which are adjustable to provide comfortable heights for a variety of people. An adjustable counter can be achieved by seaming a section of a post-formed countertop so that it can be lowered without being re-cut. The base cabinets below the adjustable segment should be removable, and cabinets at either side should have finished surfaces.[4] Counter sections which can be adjusted from 30 to 36 inches (760 to 915 mm) will provide the flexibility necessary to accommodate a variety of height needs. Both *The Accessible Housing Design File* and *Adaptable Housing* (see ENDNOTES for this chapter) provide examples of several different methods for adjusting counter heights.

If adjustable counter sections cannot be provided, it is recommended that all counters be no more than 34 inches (865 mm) high. If all counters cannot be this hight, it is recommended that at least one lowered work section no more than 34 inches (865 mm) high be provided. Adjustable or fixed lowered counter sections, if provided, should be at least 30 inches (760 mm) long, and should provide adequate knee space under their full length. Vertical clear knee space will vary with the height of the counter, but must not be less than 27 inches (685 mm).

Base cabinets which are installed with an 8-inch (200 mm) toe space allow room for wheelchair foot rests and increase maneuverability in any kitchen.

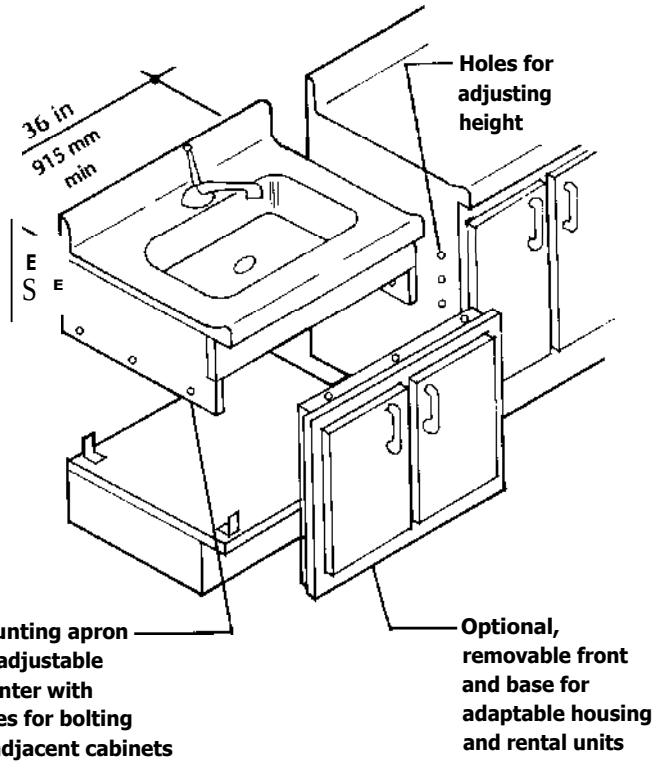

Adjustable Sink

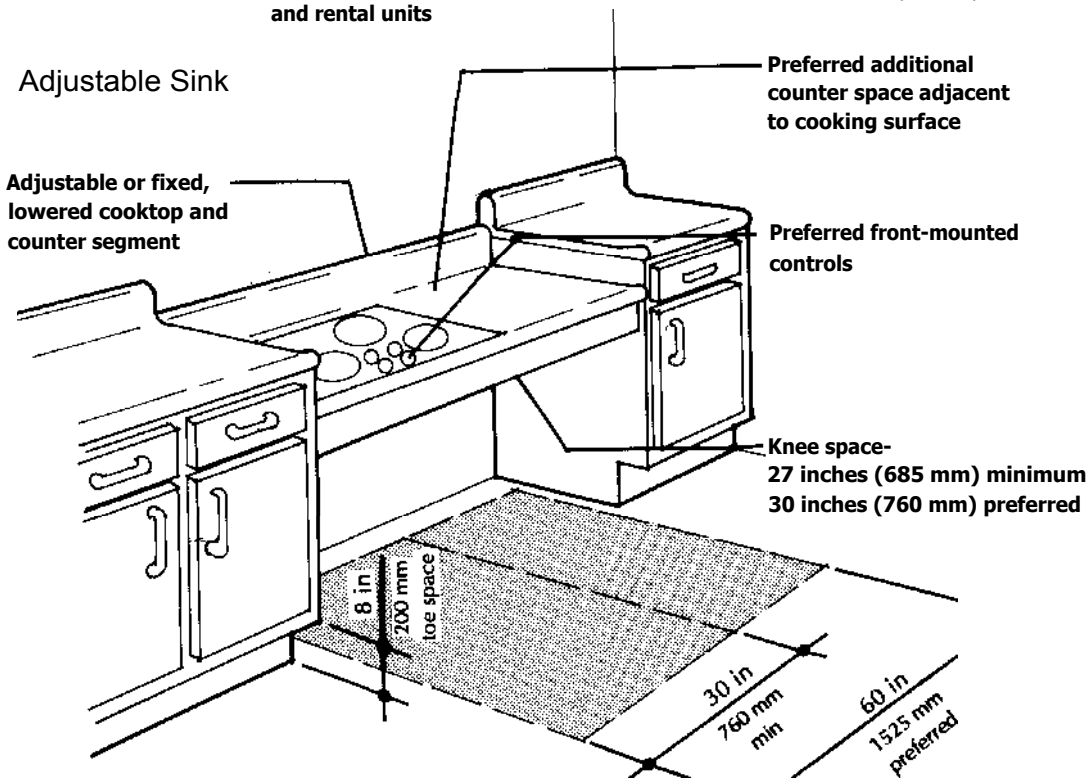

Accessible Cooktop

Cooking Appliances

The cooking surface on a standard range unit is 35 to 36 inches (890 to 915 mm) above the floor. While this height may be convenient for an average standing person, it can be extremely difficult for a seated or short person to use. Ranges also do not provide knee space which would allow a seated cook to pull closer to the cooking surface.

Separate countertop cooking units (cooktops) are a good choice for people using wheelchairs or who must remain seated while cooking. The cooktop can be installed in a fixed, lowered countertop segment that has a knee space beneath. A great deal of flexibility and accessibility can be achieved if cooktops are installed in an adjustable countertop segment. In this case, flexible electrical or gas supply lines must be provided. Electric cooktops and ranges are preferred. Whether the cooktop is fixed or adjustable, a minimum knee space 27 inches (685 mm) high must be maintained under the cooktop. The width of the lowered or adjustable cooktop counter segment may be as small as 30 inches (760 mm), but a 60-inch (1,525 mm) width is preferred to allow space for transferring pots and pans to and from the burners.[5]

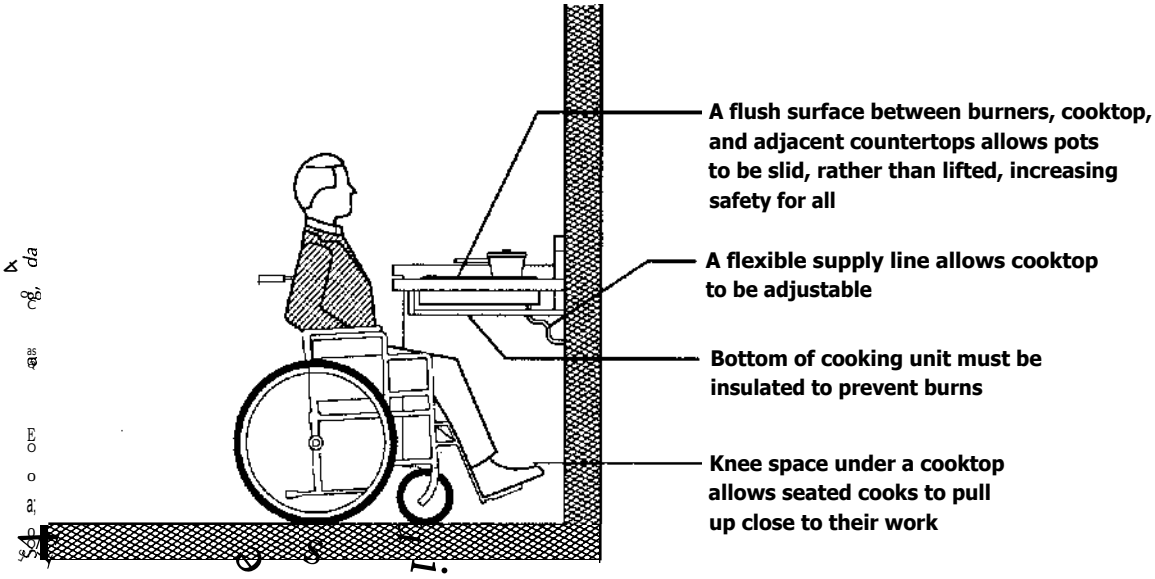

Adjustable Cooktop

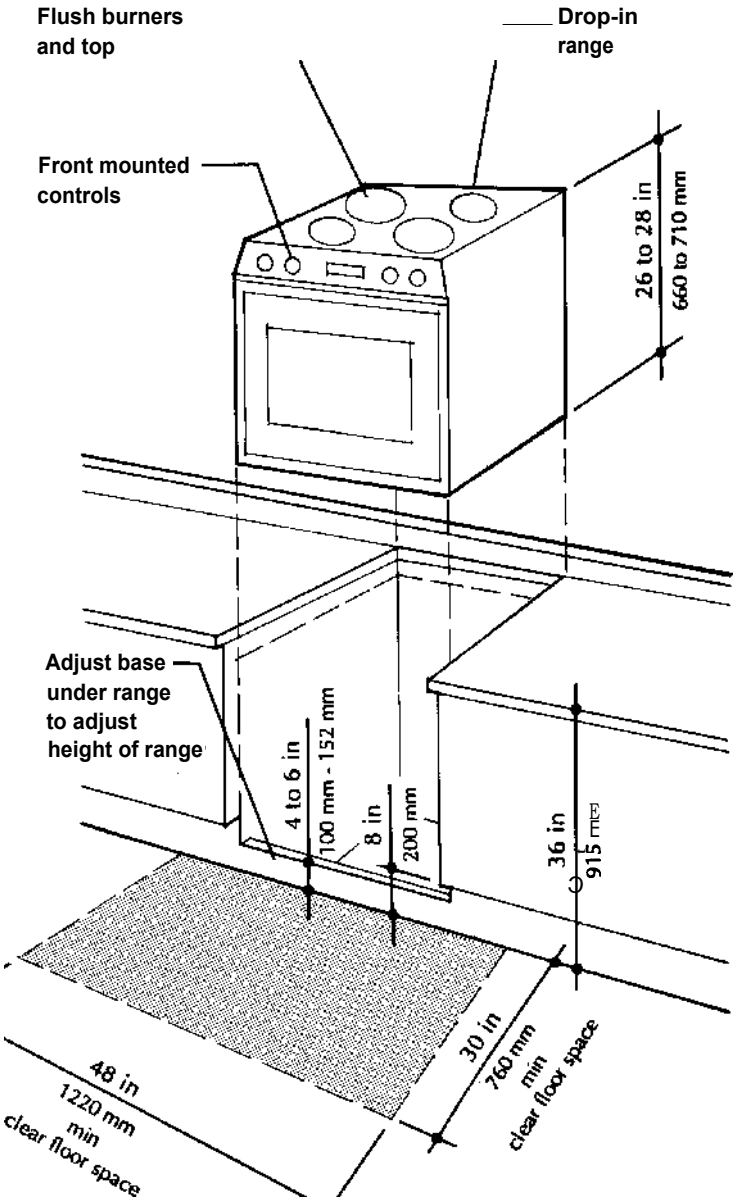

Drop-in Range

A drop-in range can be provided to make cooking somewhat accessible if money is not available in the project budget for a separate cooktop. Drop-in ranges do not have a bottom drawer and their height can be adjusted by providing a shorter baseboard. However, these types of ranges do not provide clear knee space, and thus require a seated person to make a parallel approach to the appliance in order to use the burners. A clear floor space 48 inches (1,220 mm) parallel to the range, by 30 inches (760 mm) wide must be provided to allow the necessary parallel approach.

Standard ranges are an economical and commonly-used cooking appliance, despite their inconvenience for some users. If other alternatives are not feasible, careful selection and placement can make ranges easier for people to use. A parallel approach will be required to use the burners on a standard range, so the same clear floor space required for a drop-in range must be provided.

It is strongly recommended that controls for cooktops and ranges be located at the front of the cooking surfaces. This location eliminates the need to reach over or between hot burners or steaming pots, and increases safety for everyone. These controls can be modified with tactile markings for residents with visual impairments, and should also be easy to grip for those with poor hand function. In addition, cooktops or range tops with a flush surface between the burners and the adjacent counter enable residents with reduced strength to slide pots and pans easily on and off the range. These types of cooking units should have a visible indication showing which burners are hot.

If a cooktop is installed, a separate oven must be provided. A wall-mounted oven, installed with the bottom at countertop level, is recommended. A door which swings to the side is preferable because it allows the user to move closer to the oven, making reaching and moving hot pans easier and safer. For safety, a pull-out or permanent shelf just below the oven opening, which can be used as a transfer surface for dishes being moved into or out of the oven, can be provided. This shelf should be at least 10 inches (255 mm) deep and should extend a minimum of the full width of the oven. A clear knee space at least 36 inches (915 mm) wide on at least one side of the oven will allow people who use wheelchairs to pull up closer to the oven.

The oven on a drop-in or standard range is usually quite low, and can be difficult for some people to use, especially if they have trouble bending, reaching and lifting. The drop-front door on most conventional ranges can restrict accessibility to oven racks for persons using a wheelchair or seat. A knee space at least 36 inches (915 mm) wide provided adjacent to a conventional range allows a person using a wheelchair to pull close to the oven and use one hand to reach into the oven. This space also helps people using wheelchairs to reach burners and move pots.[6]

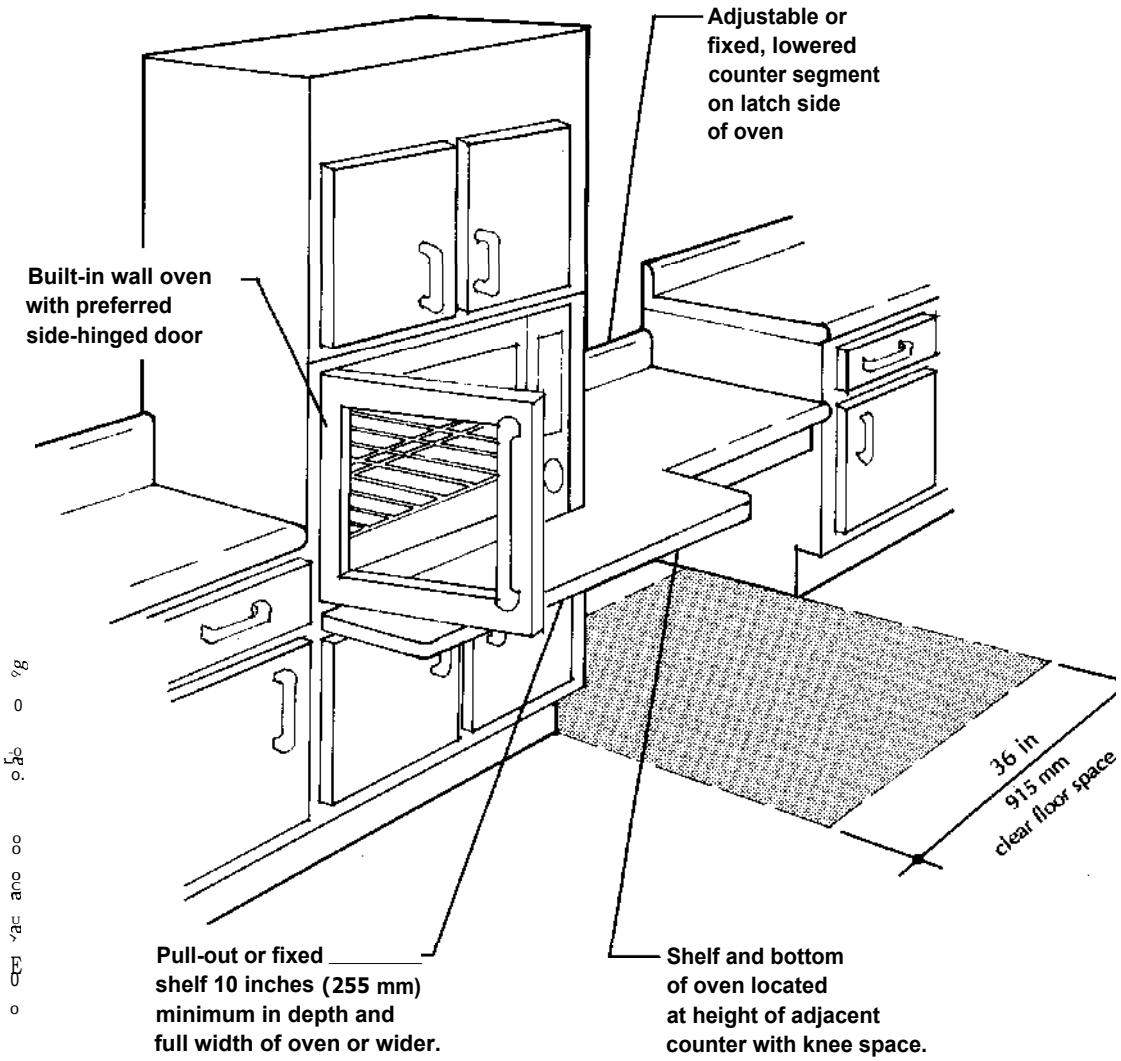

Accessible Oven

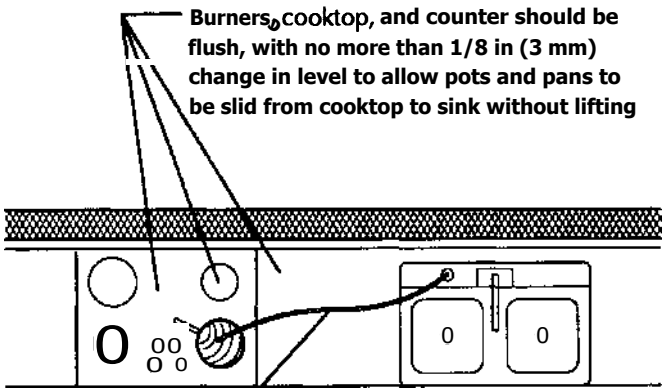

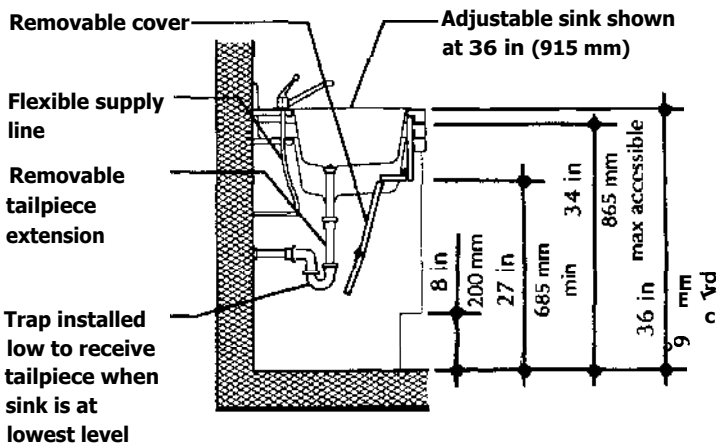

Adjustable Sink

Source: Bostrom, Mace and Long, *Adaptable Housing*

If a kitchen is being designed for an individual, the knee space can be placed where it can be best used by that person. If a kitchen is being designed for a variety of users, it is recommended that a knee space be provided on both sides.

Whenever possible, ovens should be self-cleaning, as it may be more difficult for people with disabilities to clean a conventional oven. Microwave ovens, which are a great convenience for everyone, can be provided in addition to conventional ovens, whenever possible. Built-in microwave ovens can be installed in a manner similar to that described above for conventional wall-mounted ovens.

Sinks, Dishwashers and Disposals

Kitchen sinks which have adequate knee space beneath can be used by people in wheelchairs. For maximum accessibility, sinks may be installed in an adjustable counter section and provided with flexible supply and drain lines. If adjustable counters are not feasible, it is recommended that the sink be mounted in a lowered counter section no higher than 34 inches (865 mm).

The adjustable or lowered counter segment should be at least 36 inches (915 mm) wide, but it is recommended that the sink be wide enough to provide an extra 30 inches (760 mm) of countertop space for dishes and utensils at the sink level.' Adequate clear knee space should be provided under the entire length of the lowered or adjustable counter segment. The height of this knee space will vary with the counter height, but must be at least 27 inches (685 mm) high.

If the sink must be mounted at a standard 36-inch (915 mm) height because of budgetary or existing building constraints, it can be made accessible by providing a knee space underneath. This knee space must be at least 30 inches (760 mm) wide — although 36 inches (915 mm) is preferred — and a minimum of 27 inches (685 mm) high. It is recommended that the clear knee space below a sink be wide enough to provide extra space at the sink level for dishes and utensils.

In order to provide maximum vertical clear knee space under the sink, a shallow basin no more than 6-1/2 inches (165 mm) deep must be used. To minimize reach to the controls, the sink should be

located as close to the front of the counter as possible. The drain should be located as close to the rear of the sink as possible to keep waste pipes away from the required knee space. If possible, under-sink piping should be plastic. When exposed metal piping is used, all pipes should be insulated or protected to prevent burns or other injuries.

Sink controls must be operable without twisting or grasping. A single-lever mixing valve and swivel faucet which is mounted to the side of the sink will allow pots and pans to be filled without lifting them from the counter. Another alternative is to provide a sink spray hose, preferably one which is long enough to reach the cooktop or burners. This arrangement minimizes lifting even further and allows cold water to be added to hot pots to cool them before moving.

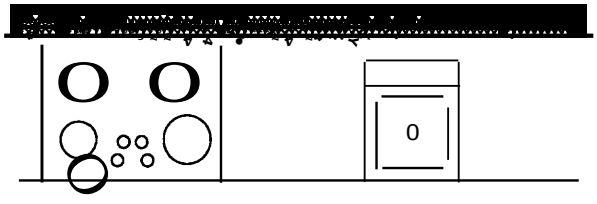

The faucet is mounted to the side of the sink and swivels so that pans may be filled with water and slid to the burners without lifting.

Automatic dishwashers, garbage disposals and trash compactors are recommended for convenience, as they greatly simplify tasks which are difficult for everyone, especially people with disabilities.

Dishwashers, when furnished, should be located next to the sink. A knee space provided adjacent to the dishwasher will accommodate users who are seated. This knee space can be shared with the sink to provide an extra work surface for cleaning tasks. Undercounter dishwashers will require a standard 36-inch (915 mm) high counter. If lowered or adjustable sinks are planned, special care should be taken to place the dishwasher so that the change in counter height does not become inconvenient.

Garbage disposals should be located at the rear of a sink so that their interference with clear knee space is minimized. If a double bowl sink is used, the disposal can be installed in one bowl and enclosed with a base cabinet, leaving clear knee space under the other bowl.

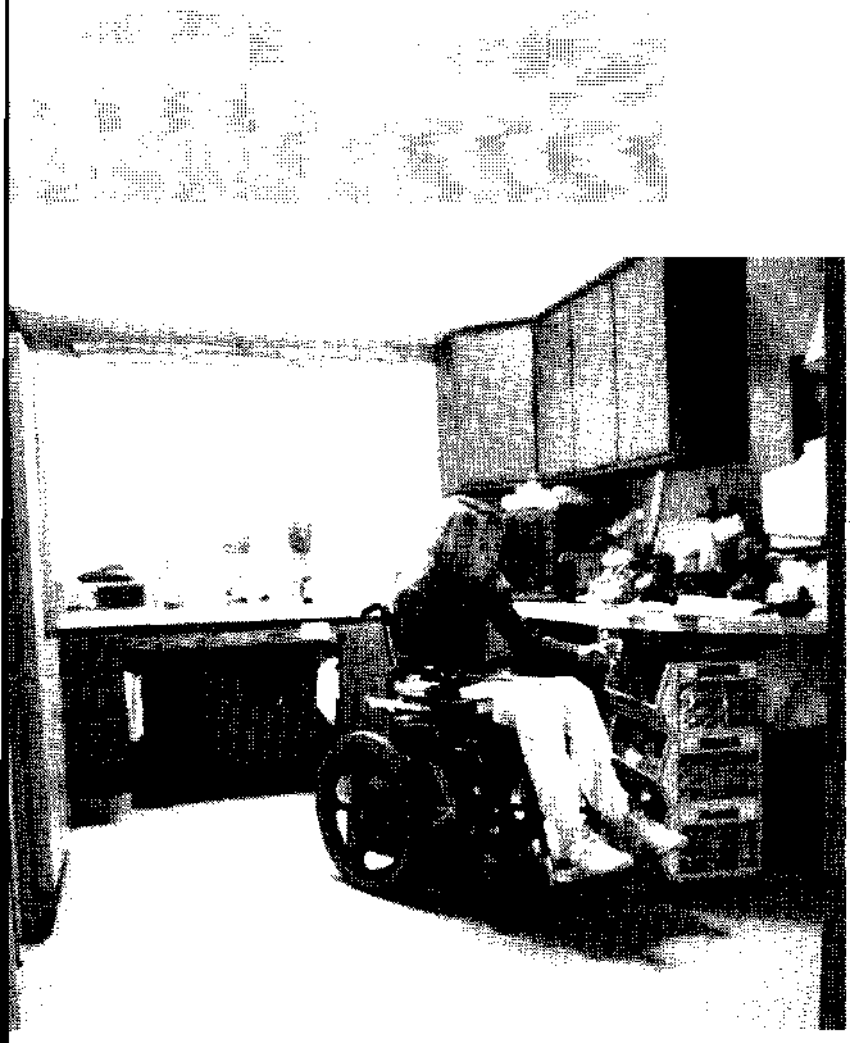

Storage

Due to their individual reach limitations, standard kitchen cabinet arrangements provide very little usable space for people with disabilities. Standard upper cabinets place almost all items above the reach of wheelchair users, and standard lower cabinets are almost always too deep— and in some cases, too low. In addition, a significant amount of lower cabinet space is lost when knee space is provided at counters and sinks for people who use wheelchairs. Where base cabinets are provided, the recommended 8-inch (200 mm) toe space in lieu of the standard 4-inch (100 mm) toe board further reduces storage space. This lost storage space can be replaced through modification of standard cabinets or the provision of additional accessible storage.

Drawers with full extension hardware provide the most convenient type of storage for cooks using wheelchairs, because their contents can be seen and retrieved from above. Standard kitchen base cabinets can be fitted with a combination of these types of drawers and pull-out storage bins or racks below. Such racks or bins will operate with a minimum of effort if they are mounted on rollers or glides. Corner base cabinets equipped with lazy Susan-type revolving storage shelves increase reachable storage space. C-shaped handles, which can be hooked, should be mounted low on upper cabinets and high on lower cabinets for the greatest convenience. Cabinets should have self-closing hinges instead of latches.

Shallow, free-standing or built-in pantry-type cabinets with adjustable shelving installed between 15 and 48 inches (380 and 1,220 mm) above the floor can replace a significant amount of the storage space lost to knee space or excessive height. Several sliding and pantry-type cabinets have been devised for use by persons in wheelchairs. Mobile drawer units or trolleys on castors provide additional storage and work surfaces, and enable equipment to be moved with a minimum effort.

The best refrigerator/freezer unit for accessible kitchens is a side-by-side model. This unit has narrow doors which do not require much clearance, and is convenient because the frozen food compartment is neither above nor below the refrigerator compartment. A clear floor space 30 inches (760 mm) wide by 48 inches (1,220 mm) deep, which is parallel to the refrigerator, must be provided in front of a side-by-side refrigerator.

Storage for dishes and glasses which is convenient both to the dishwasher and dining room benefits everyone. One suggestion is a cabinet with doors on both sides that serves as a divider between the kitchen and dining area. Storage for pots, pans and cooking utensils which is close to the range and oven minimizes lifting and bending.

Kitchen A

ACCESSIBLE KITCHEN

This kitchen would be suitable for a small apartment. Universal 34-inch (865 mm) cabinet heights and removable base cabinets allow the kitchen to be adapted to the needs of a resident with or without a disability. In low-cost installations specifically for the use of people in wheelchairs, the removable cabinets could be omitted entirely.

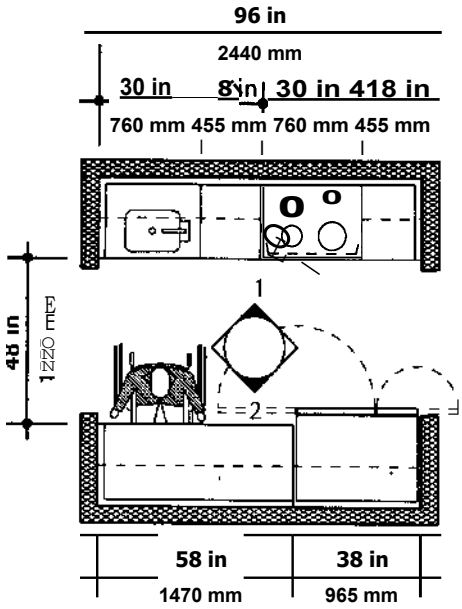

Plan A

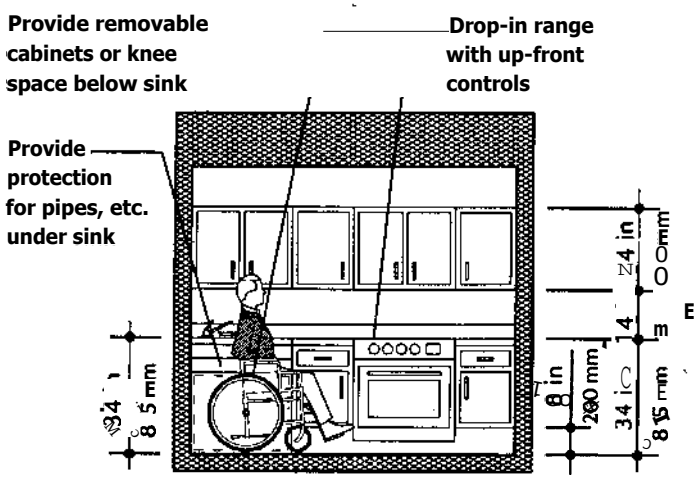

Elevation 1

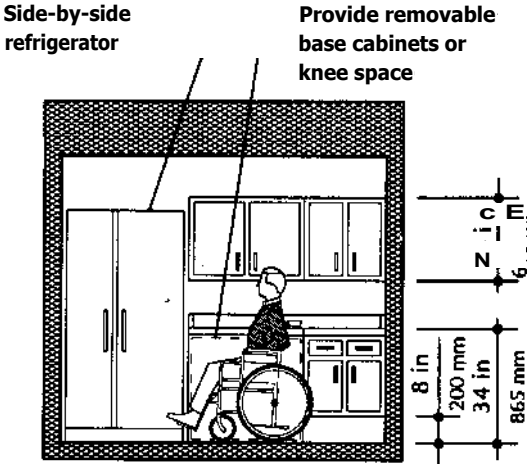

Elevation 2

Kitchen B

STANDARD ACCESSIBLE KITCHEN

This kitchen would be suitable for a small home or large apartment intended specifically for the use of people in wheelchairs. The open counter segments could be provided at a specific height if the kitchen is designed for the use of one individual.

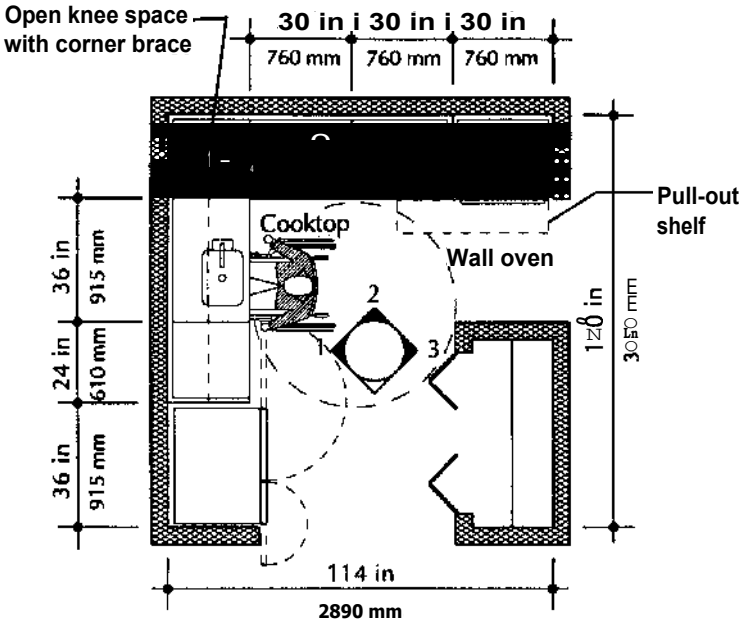

Plan B

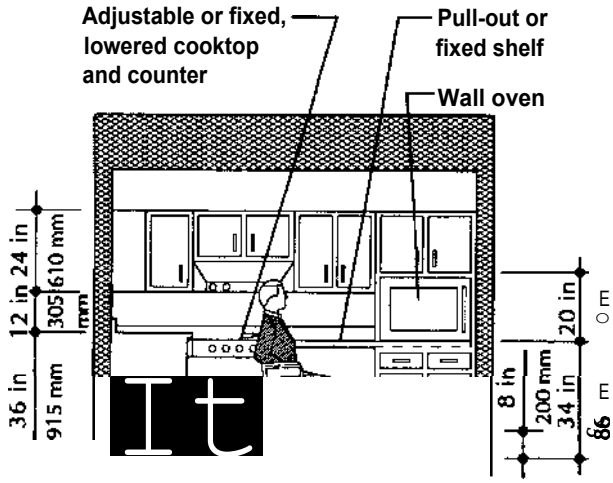

Elevation 1

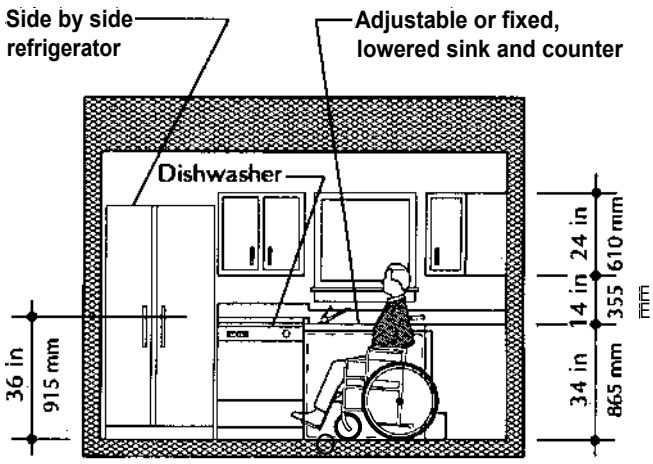

Elevation 2

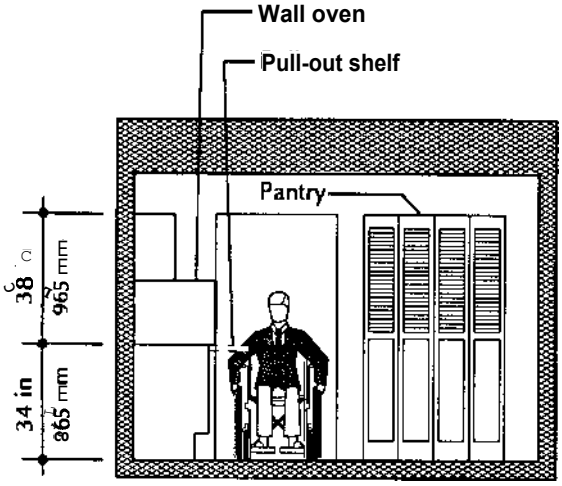

Elevation 3

Kitchen C

ELABORATE ACCESSIBLE KITCHEN

This kitchen is well suited for people in wheelchairs who like to be involved with food preparation and live with family members without disabilities or have a personal care assistant. Adjustable or lowered counter segments provide options for a variety of people to use the kitchen. An additional counter is provided for eating and working at a 32-inch (815 mm) height to further expand the use of the kitchen.

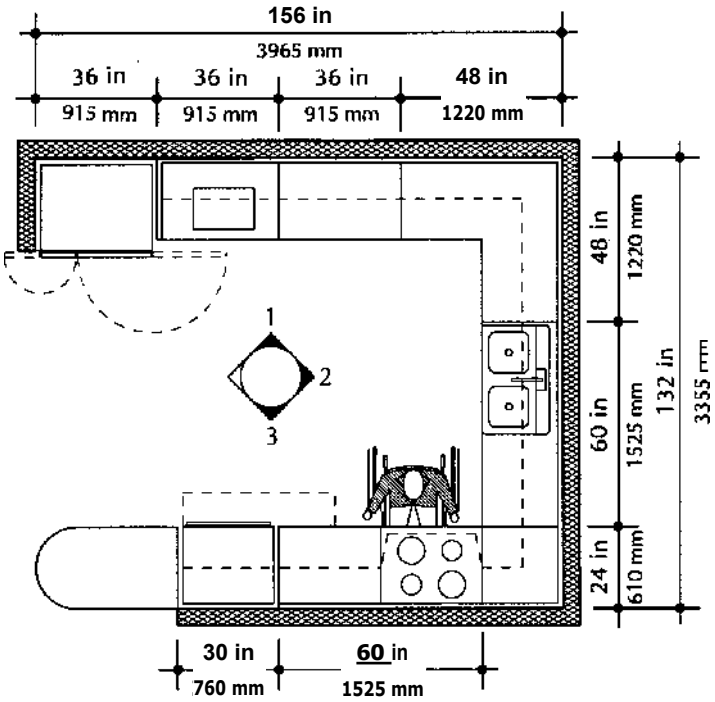

Plan C

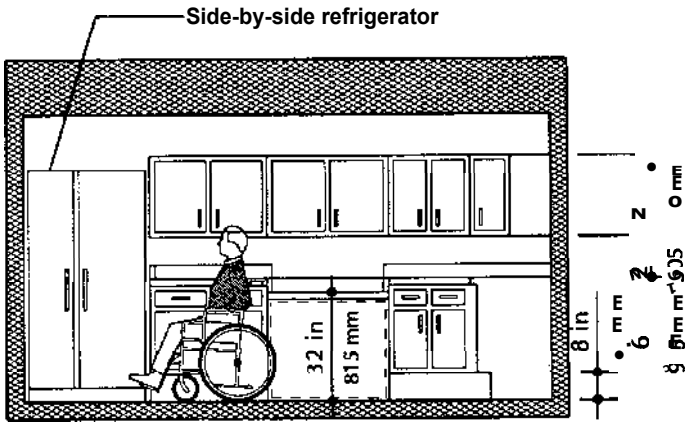

Elevation 1

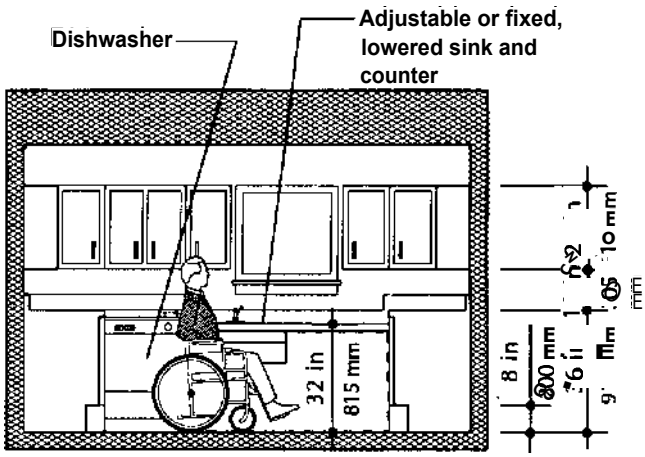

Elevation 2

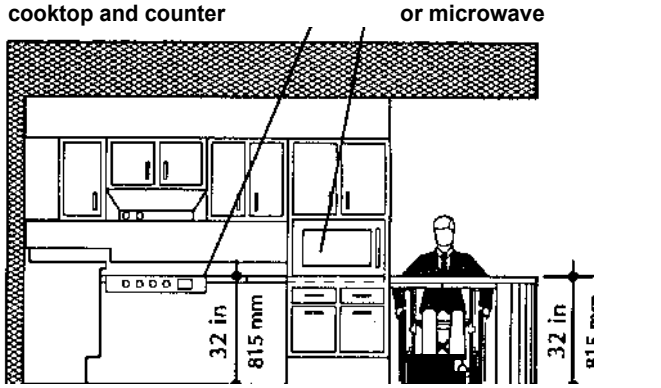

Elevation 3

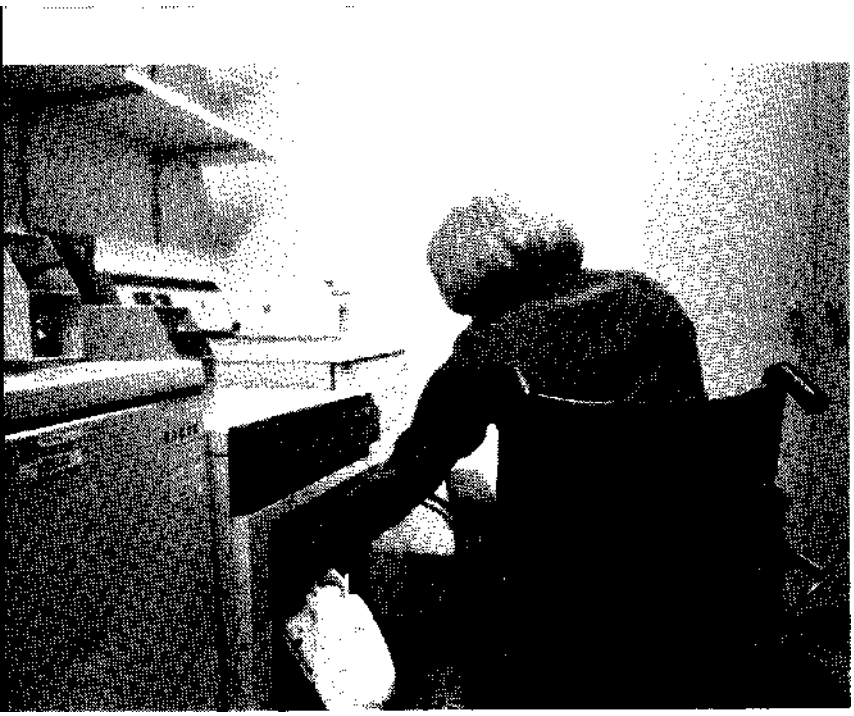

Laundry

Although a washer and dryer might be considered a luxury in some publicly-financed housing projects, the availability of this "amenity" allows one more task to be performed independently by a person with a disability. If washers and dryers are provided, whether in individual units or in a central community facility, they should both load from the front. At the very least, floor space, electrical and plumbing provisions should be made in each unit so that a washer and dryer could be supplied at the resident's own expense.

If the laundry is coin-operated, the coin slot should be easily accessible to and operable by people with disabilities. See the section, "Conveniences and Controls," beginning on page 116 for more information.

Bedrooms

It is recommended that at least one bedroom in each living unit have sufficient room for twin beds as well as adequate wheelchair maneuvering space. Convenience to an accessible bathroom from the primary bedroom is essential.

An efficient bedroom layout is one which will allow adequate access and maneuvering space for persons with limited mobility. Persons using wheelchairs usually require more maneuvering space than people with other types of disabilities, thus most of the recommendations which follow are based on wheelchair clearances. These spatial allowances will generally permit efficient use by all persons with disabilities.

A minimum 36-inch (915 mm) aisle should be provided on at least one side of the bed. Where a bedside table is provided, an aisle which is a minimum of 48 inches (1,220 mm) wide will allow angled access to items on the table. lithe minimum aisle space is not achievable, a 9-inch (230 mm) high by 12-inch (305 mm) deep toe space provided under the table will allow a front approach to the table.[9]

A clear space which is a minimum of 32 inches (815 mm) deep is preferred in front of fully-opened dresser drawers. Adequate maneuvering space should be provided in front of or inside all closets, and required clearances should be provided in front of any doors or windows for their operation.

Finally, a clear maneuvering space to make a 60-inch (1,525 mm) diameter turn is recommended somewhere in each accessible sleeping room.

Adjustable beds are preferred by most people with disabilities, and by those who assist them to get in and out of bed. Fixed level beds should have a mattress height of 18 inches (455 mm), which is usable by almost everyone.

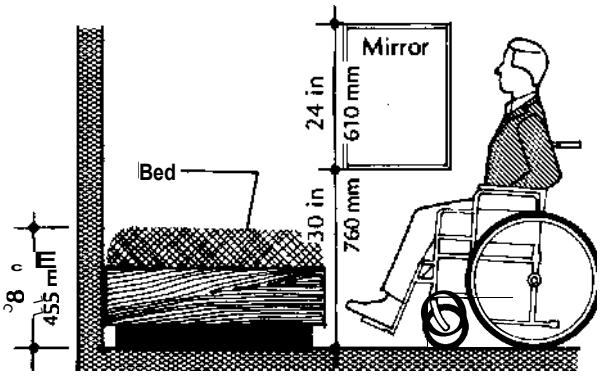

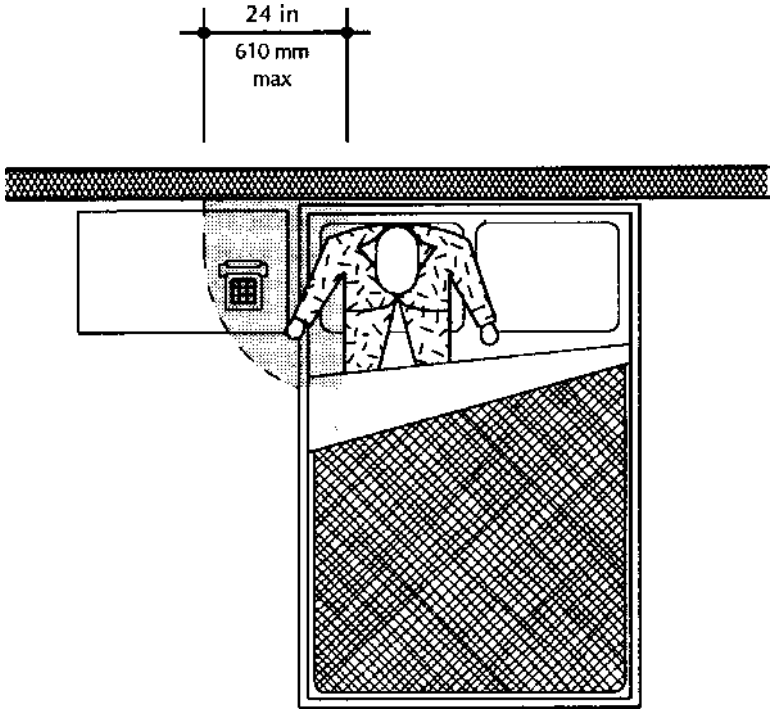

A bedside table within easy reach of the bed, approximately 24 inches (610 mm) from the edge of the mattress, should provide space for a reading lamp, telephone, TDD, clock, and radio or remote controls. It is recommended that the top of this table be approximately 2 to 3 inches (50 to 76 mm) above the mattress, and the reading lamp shade be 30 inches (760 mm) above the mattress."

Full-length mirrors can be used by everyone, and are recommended for bedrooms. It is recommended that mirrors placed above dressers be no smaller than 24 inches (610 mm) high, and mounted at least 30 inches (760 mm), but no higher than 34 inches (865 mm), above the floor.

Convenience outlets, light switches and other controls should be located as noted in other sections of this handbook.

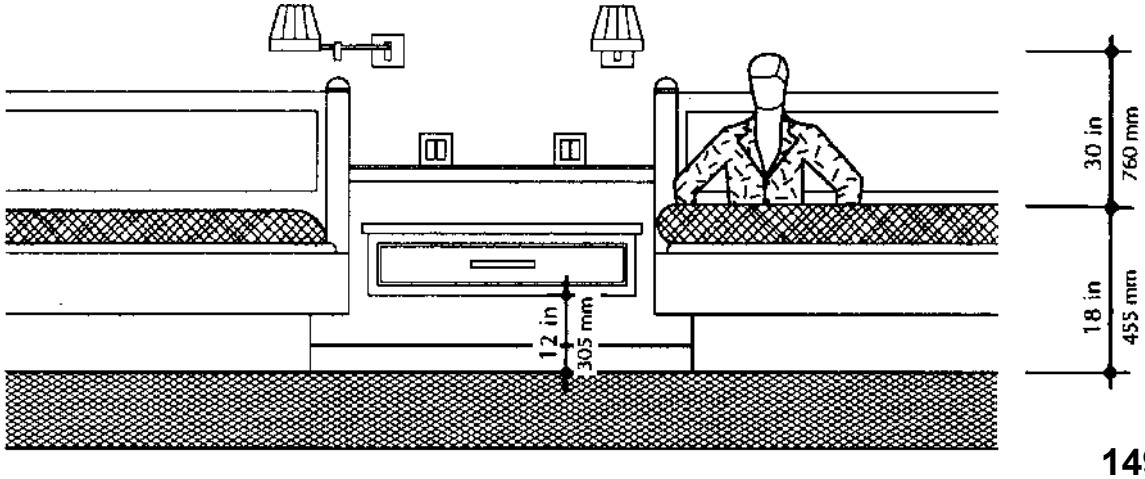

Source: Davies and Beasley, *Design for Hospitality*

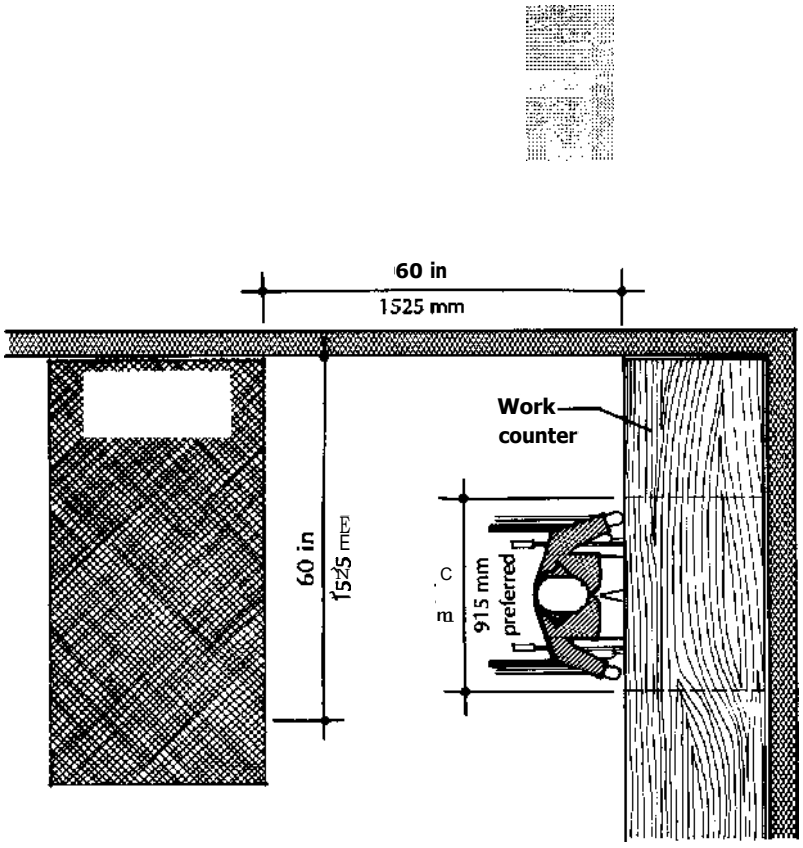

Storage furniture such as dressers, cabinets, nightstands and desks should be easy to access and operate by a person with limited use of only one hand. Drawers with one central handle operate freely even with weight in them. Top drawers located at a minimum height of 27 inches (685 mm) minimize stooping and bending. Cabinets with two narrow doors rather than one wide one are easier to operate. All hardware should be capable of being hooked rather than grasped.

Work areas, desks and counters with a minimum knee space clearance of 30 inches (760 mm) from the floor and 36 inches (915 mm) of horizontal clearance are preferred. Desk or work tops which are a maximum of 24 inches (610 mm) deep allow access to lamps or outlets located at the back edge.

Closets should be designed to conform with all of the requirements outlined in the section, "Closets," beginning on page 135. Fixed clothes rods no higher than 48 inches (1,220 mm) above the floor and wall hooks no higher than 40 inches (1,015 mm) above the floor are preferred. A raised shoe shelf or platform, a minimum of 9 inches (230 mm) high and no more than 12 inches (305 mm) deep, provides low storage which is more convenient than floor storage for residents in wheelchairs or for those who have difficulty bending.

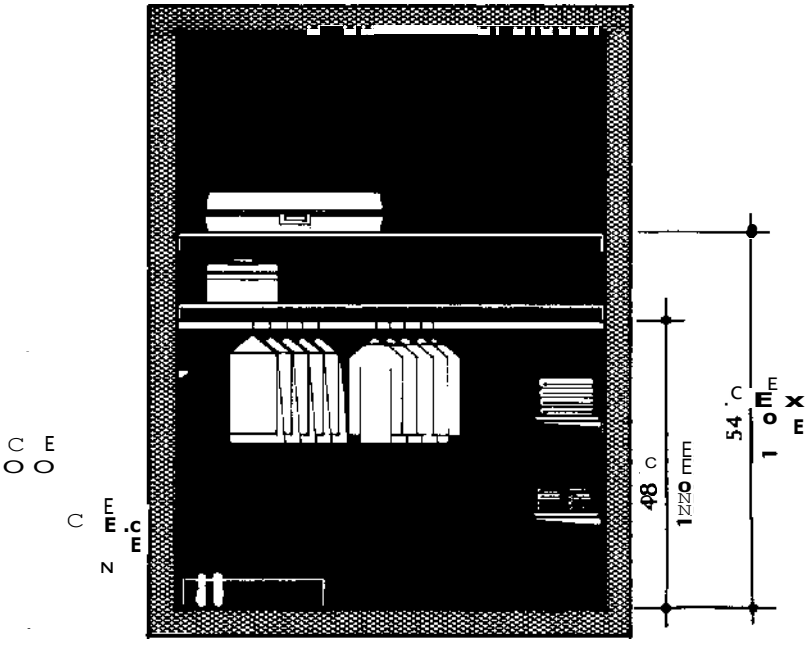

Bathrooms

A fully-accessible residential bathroom should provide adequate wheelchair maneuvering space for entering, turning and using the fixtures as outlined in the section on adaptable bathrooms. Grab bars should be provided in the locations indicated for reinforcement in the drawings on page 133.

Toilets

Toilet height is indicated in the section, "Toilets and Toilet Stalls," beginning on page 108; however, if the dwelling is being designed for a specific individual, those special needs will dictate the seat height. In an existing residence where money is not available for the installation of a new toilet, a lower seat may be raised through the use of spacer rings, blocking or a clip-on plastic seat.

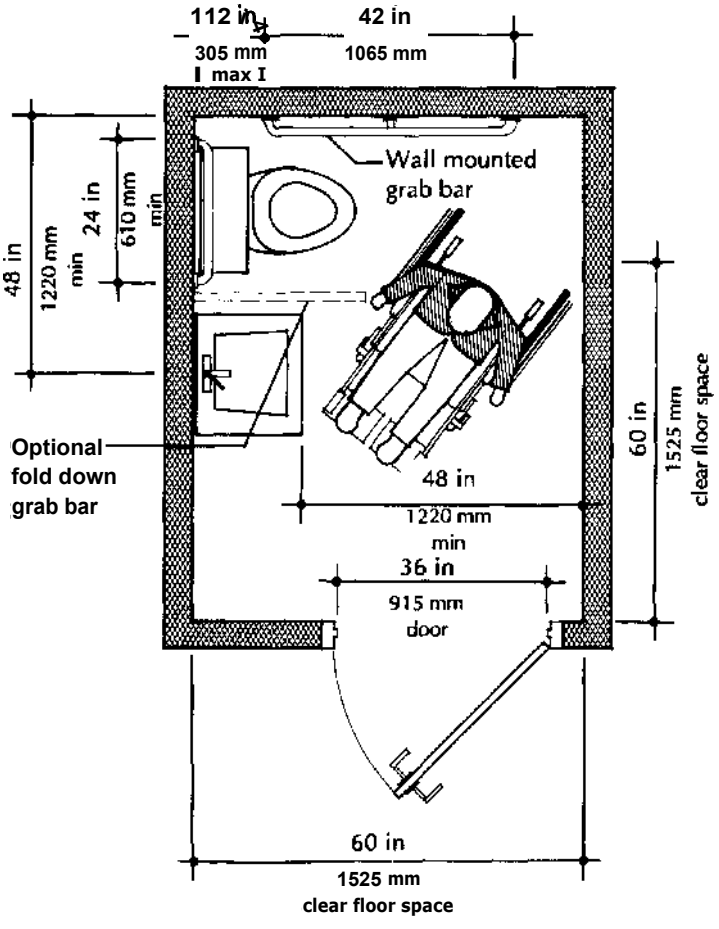

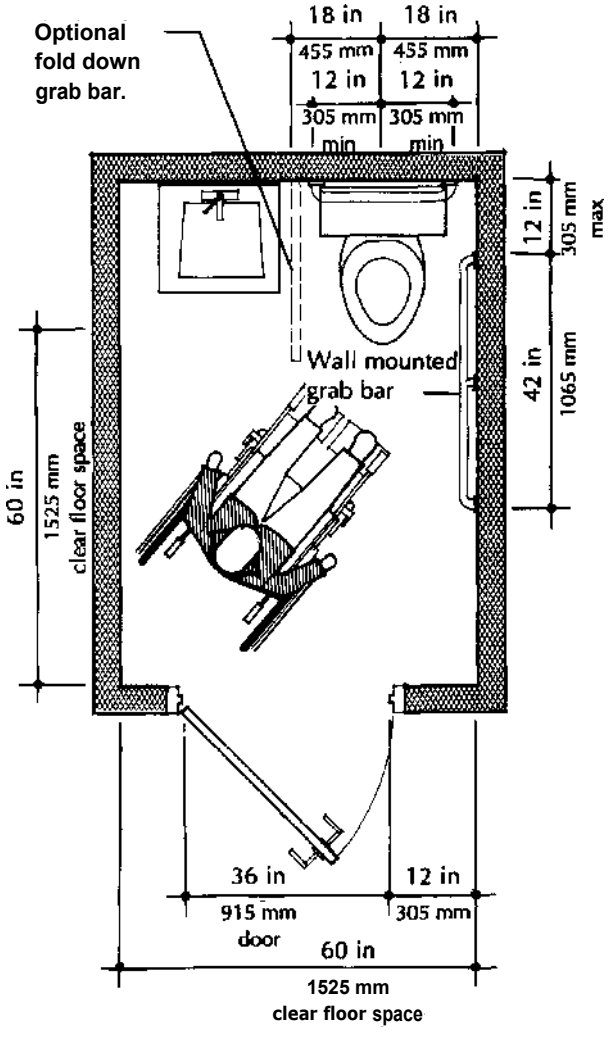

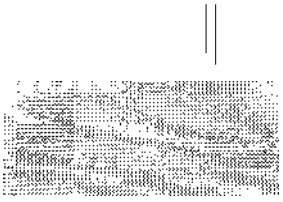

Accessories

Full-length mirrors are suggested. The preferred mounting location for medicine cabinets, towel bars, light switches and electrical outlets is no higher than 40 inches (1,015 mm) above the floor, and within easy reach of associated fixtures. Medicine cabinets and soap dishes which are recessed, and rounded edges, such as those on towel bars, increase safety. It is suggested that a telephone or some other type of emergency call device be provided in all accessible toilet rooms. This device should be mounted low enough on the wall so that a person who has fallen and is injured can use it to call for help.

Bathtubs

Although there are some people with disabilities who can use only a shower, there are many who can and prefer to use a bathtub, if it is properly equipped. If only one bathing facility can be provided, a shower is preferable, but for the most flexibility, both a tub and a separate shower are recommended.

If the lip of the tub is 18 to 19 inches (455 to 485 mm) high — which is approximately level with the height of a wheelchair seat—transfers will be facilitated. A conventional tub can be raised on a platform to achieve this height.

The tub should be provided with a seatwhich allows bathers to sit and transfer their legs across the edge of the tub, eliminating the need for stepping over the tub edge. The preferred type of seat is an integral molded plastic or tiled bench, which can be located at one end of a conventional tub. Removable or portable seats are available and can be useful in temporary or low cost adaptations, but many of them do not meet ADA specifications for loading and fastening.

A hand-held shower spray unit should be provided in all accessible tubs, and should be located within easy reach of the seat. Grab bars should be provided on all side walls of the tub, and should be located to facilitate transfers to and from the seat. Controls should be located near the outside wall so that they are easy to access and operate by everyone. Shower curtains are preferred over glass sliding doors, which restrict total access to the tub at once.

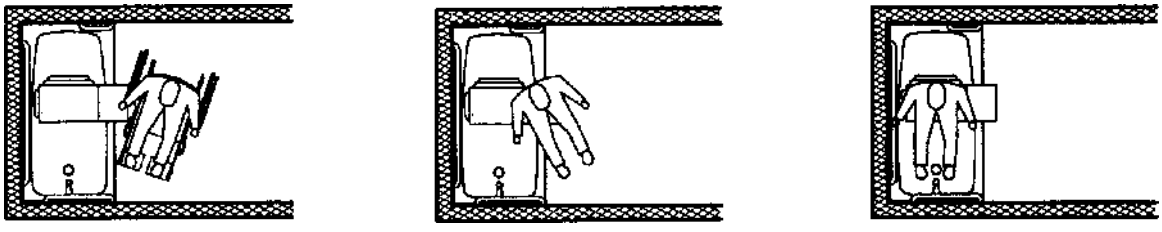

Wheelchair transfer (front approach) to a portable seat for showering. The seat should be positioned near the center of the tub so that a person using a wheelchair can reach the controls.

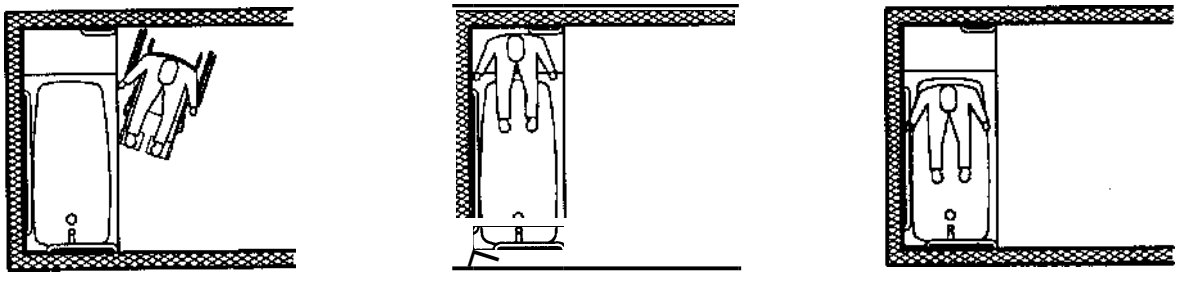

Wheelchair transfer (front approach) to a tub for bathing. Clearaccess is required to allow the person using a wheelchair to close the drain and draw water before transferring to the tub.

Grab Bars

Fully-accessible bathrooms should include grab bars at the toilet, tub and shower. The ideal grab bar configuration next to a private toilet is similar to that in a public toilet stall. If the toilet is within 18 inches of a wall, grab bars should be installed in the configuration shown on page 151.

If the toilet is not located near a side wall, a wall-to-floor-type grab bar, 1-1/2 inches (38 mm) in diameter, 33 inches (840 mm) high and 36 inches (915 mm) long may be securely anchored at one side of the toilet.

The best location for grab bars in a tub or shower will vary considerably depending on the ability of each resident. Generally, bars should be placed as indicated on the drawings on pages 115 and 133.

Grab bars are now available in a wide range of materials and colors. It is recommended that bar finishes be integrated with bathroom finishes to avoid an institutional appearance.

Lavatories

Lavatory height, maneuvering clearances and knee space should be provided as outlined in the section, "Lavatories," beginning on page 110. The lavatory bowl should also follow the guidelines from this section, as well. Lavatories on an adjustable track could increase the flexibility of a residential bathroom by adapting to people with differing types of disabilities.

Remote controls, mounted at the front edge of the lavatory, are available for people whose disabilities make it difficult or impossible to reach. A flexible showerhead-type hose located next to the lavatory facilitates hair washing.

Showers

In order to be fully accessible, a dwelling ought to provide a roll-in shower with a folding seat. As discussed in the section, "Shower Stalls," beginning on page 113, such showers are usable by almost anyone. Transfer showers are described in the same section, and may be used where space does not allow a roll-in shower. Whichever type of stall is provided, it should be equipped with a hand-held shower spray unit.

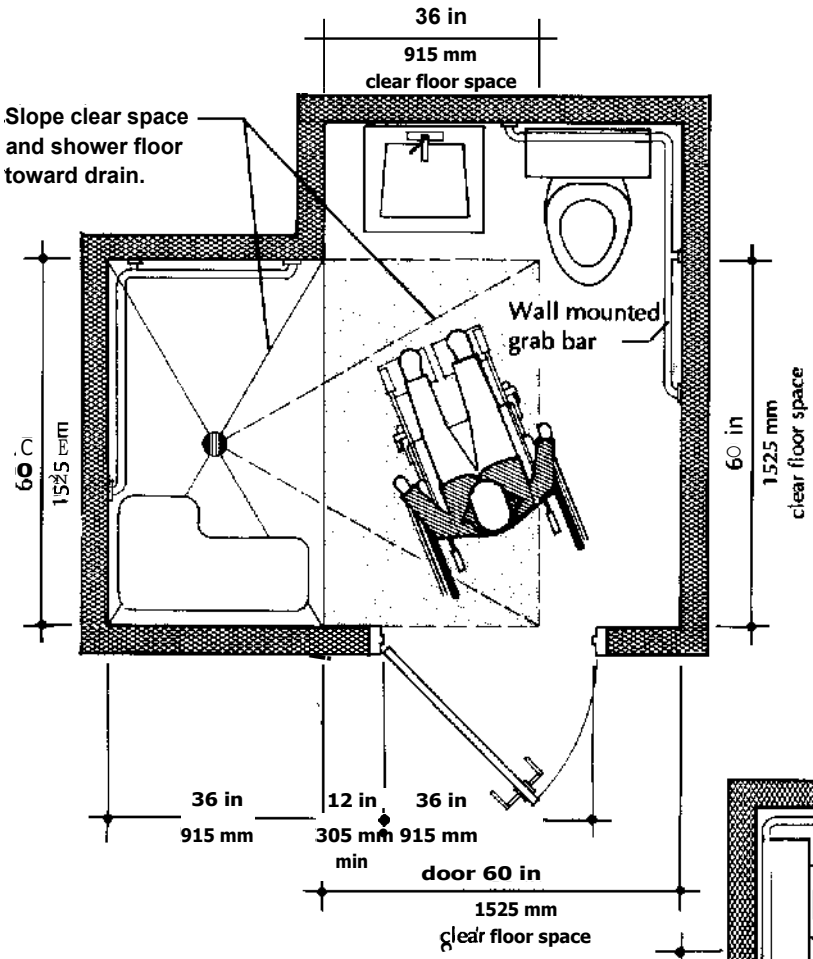

Bathroom with Roll-in Shower

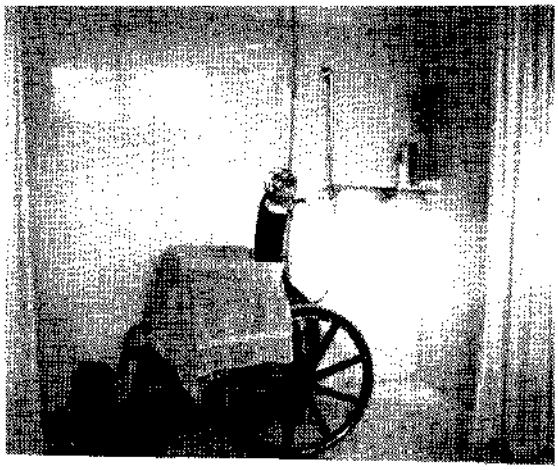

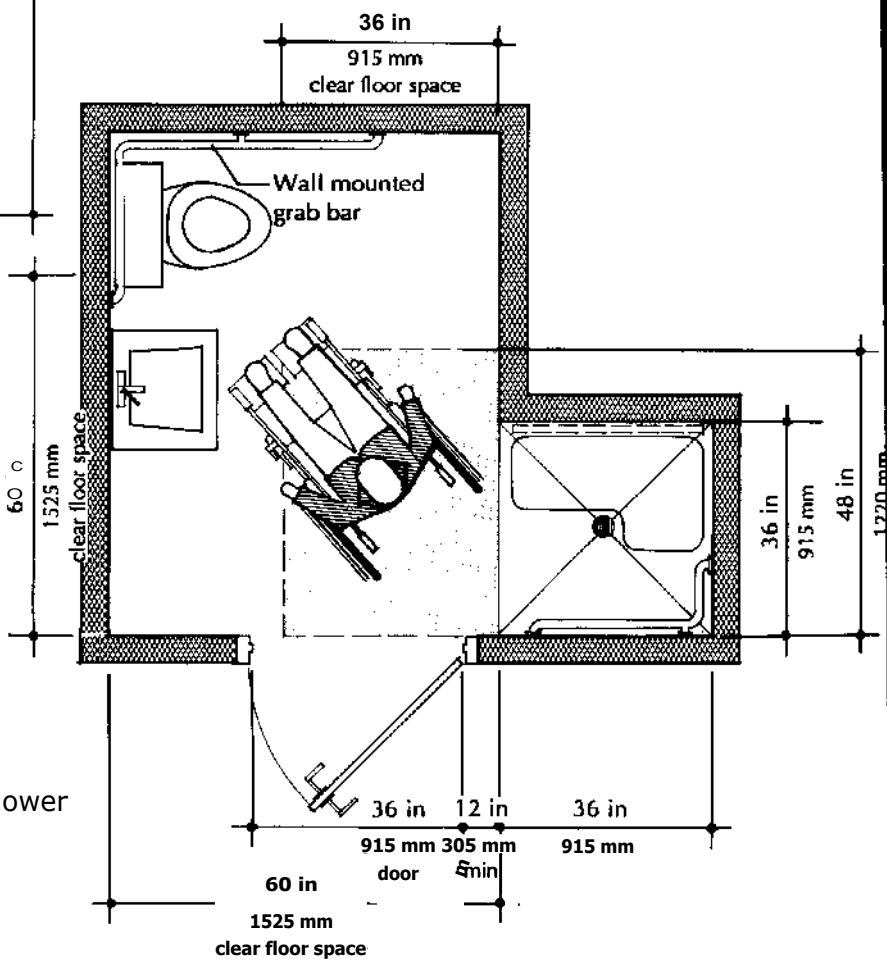

Bathroom with Transfer Shower

Storage

The amount of storage space required by persons with disabilities varies little from that needed by people without disabilities, but may actually exceed it in some cases. Persons with disabilities often require significant amounts of storage for large, bulky items such as wheelchairs, battery chargers, walkers, canes, portable toilets, shower lifts or other independent living aids. Larger cabinets may also be required in bathrooms for medical supplies. Providing space for parking a spare wheelchair near an outlet simplifies the process of battery recharging. Linen closets and bathroom supply closets with adjustable shelving are recommended.

Windows

Windows in units designed for people with disabilities should have low sills and require a maximum force of five pounds to operate.

Horizontal sliding windows are the safest and require the least operating effort, provided they have good rolling systems and are well maintained. A long horizontal clear space must be provided adjacent to these windows in order to operate them.

Single- or double-hung window sashes which require raising and lowering operations are not recommended since many people have difficulty using them. Hopper-type windows project inward and may create a hazard. Casement windows are safer and easier to operate, but their upper catches may be above the reach of some persons. Awning windows, if placed low enough, are relatively easy to access and operate with one hand.

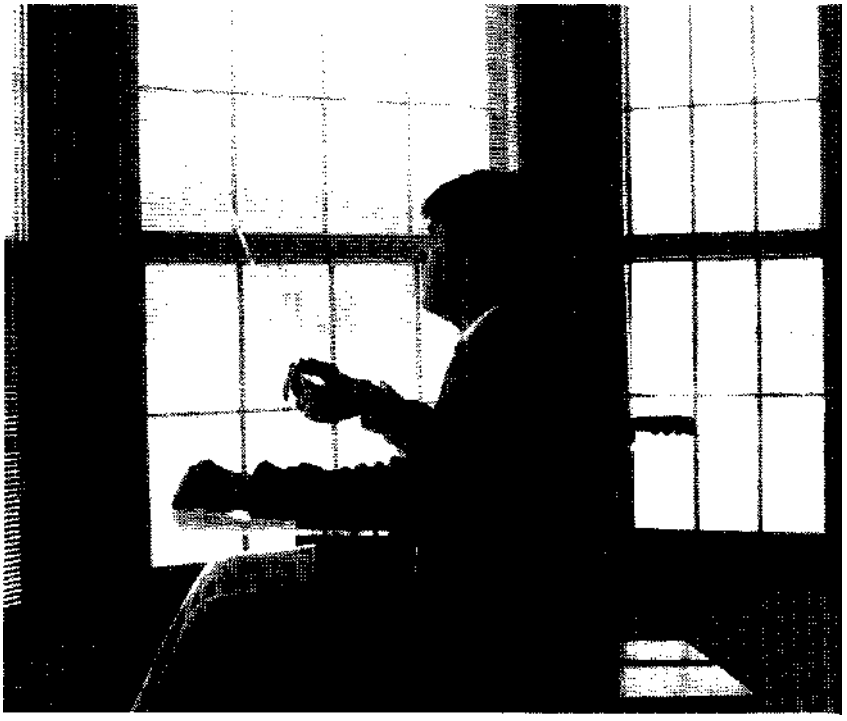

Window sill heights between 24 and 32 inches (610 and 815 mm), which allow views for people using wheelchairs, are recommended. Operating hardware for windows, draperies, shades, blinds and shutters should be conveniently located and easy to use. Window shades should have pulls which allow the ring to be no higher than 48 inches (1,220 mm) above the floor when the shade is fully open so that the ring can be easily reached.

Telephones

Telephones are essential tools for people with disabilities. Wall telephones should be mounted no higher than 48 inches (1,220 mm) above the floor. A bedside telephone is recommended for emergency use. A telephone in the bathroom as well allows a person to summon help in case of an accident. Phones which provide a visual signal and adjustable volume controls are available and should be provided for use by persons with hearing impairments. An electrical outlet provided adjacent to all telephone jacks permits the use of special devices such as TDDs.

Doors

Basic requirements for doors are covered in "Doors and Doorways," beginning on page 80. All doors used in residential units should conform to these requirements.

Floors

Low maintenance floor finishes and low pile carpeting should be used to facilitate wheelchair traffic. Careful color selection for resilient flooring allows for the possibility of marks left by rubber tires. For further information, see the section, "Floor Surfaces," beginning on page 86.

Lighting

Lighting should be controlled by accessible wall switches. It is recommended that some wall outlets be activated to work from wall switches so that table or floor lamps can be easily used. A rocker-type light switch is much easier for most people to use than an individual appliance switch or an in-line cord switch. Light fixtures capable of handling 150-watt bulbs benefit not only residents with residual vision, but increase safety and visibility for all residents. For a discussion on switches and electrical outlets, see page 118.

Signals

The design of living units for people with disabilities should include a full study of the various communications and warning device needs of the occupants. Provision for visual indicators in telephones, doorbells and smoke detectors is extremely important. In addition, attention should be given to the need for an individually-tailored signalling system to summon assistance for people with disabilities who live alone. For example, a multi-family housing project where staff is available 24 hours a day might provide emergency pull switches in the bathroom, bedroom, living room and kitchen.

Garages

An attached garage is an amenity which can be appreciated by everyone, but is especially important for people with disabilities. An enclosed, locked garage provides an extra measure of security and comfort for people who can be extremely vulnerable to crime or poor weather conditions.

Any garage provided for a person using a wheelchair must have sufficient room to accommodate transfers to and from a vehicle as well as for wheelchair storage, if the chair is to remain at home. If the floor of the garage is not flush with the entry to the dwelling, a ramp should be provided.

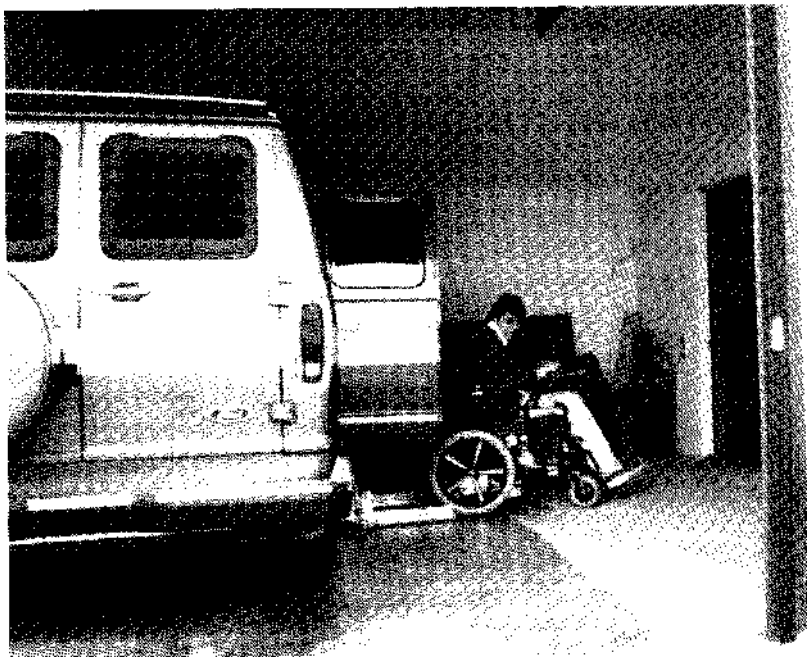

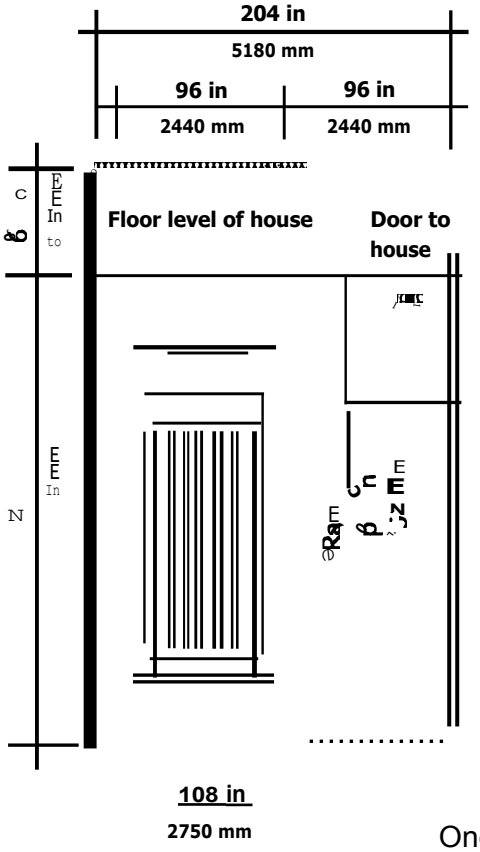

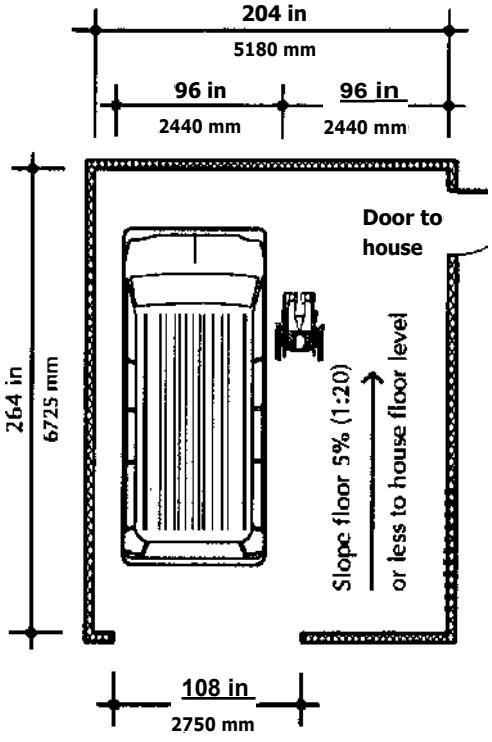

One-car Garages

The garage light with a two-way switch and an automatic garage door opener which also turns on the light inside the garage are recommended. The time delay on both the door and light should allow sufficient time for a resident to make any necessary transfers and enter or exit the home. Al 3-amp outlet located in the garage could be used for recharging the wheelchair batteries while the resident is away from home.

If an enclosed, attached garage is not feasible, a carport or other type of shelter may be provided to afford protection from the elements in rainy or snowy climates. It is also recommended that access to and from a separate garage or carport be covered and illuminated.

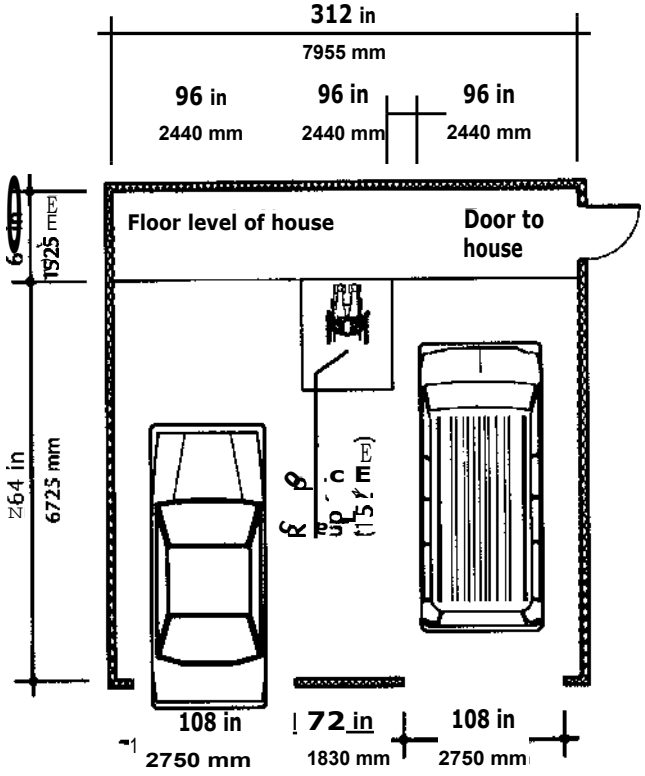

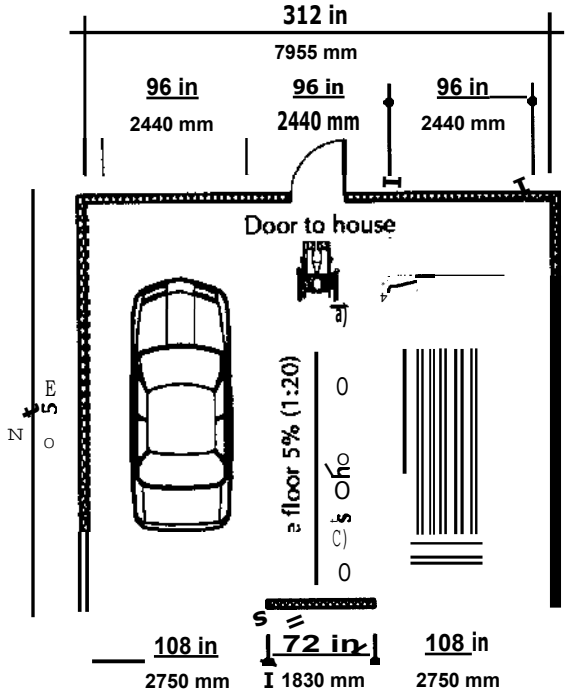

Two-car Garages

Outdoor Spaces

Terraces and patios should be level with interior floor elevations. Recreational facilities such as swimming pools, playgrounds, hiking or biking trails, and picnic areas should be accessible for people in wheelchairs or with other mobility impairments, and to people with visual impairments. More information on the accessibility of these types of facilities can be found in the section, "Recreation," beginning on page 187.

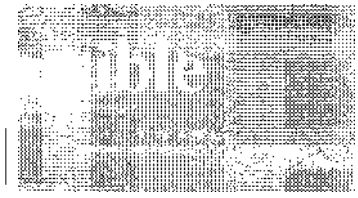

Community Facilities

FHAA requires that all public and common areas in multi-family housing projects be readily accessible for and usable by persons with various disabilities.

Community areas or buildings which are carefully sited and planned will encourage interaction between all residents, regardless of age or ability.

Careful consideration must be given to the location of certain shared facilities, such as the laundry or mailboxes. Such facilities are less likely to provide access problems for certain residents if they are provided for each individual unit or at several intermediate locations, rather than at one central location, which may be inconvenient from some units.

ENDNOTES

1. Donald D. Davies, Jr., AIA and Kim A. Beasley, AIA, *Design for Hospitality: Planning for Accessible Hotels and Motels* (New York: Nichols Publishing, 1988), page. 68.

2. Ronald L. Mace, FAIA, *The Accessible Housing Design File* (New York: Van Nostrand Reinhold, 1991), page 203.

3. Ibid., page 105.

4. Ibid., page 127.

5. James A. Bostrom, Ronald L. Mace, AIA, and Maria Long, *Adaptable Housing — Marketing Accessible Housing for Everyone,* for the U.S. Department of Housing and Urban Development Office of Policy Development and Research (1987), pages 26-27.

6. Mace, op. cit., page 131.

7. Bostrom, Mace and Long, op. cit., page 36.

8. Mace, op. cit., page 131.

9. Davies, op. cit., pages 70-71.

10. Mace, op. cit., page 195.

11. Davies, op. cit., page 73.

12. Ibid., page 74.

Public Facilities

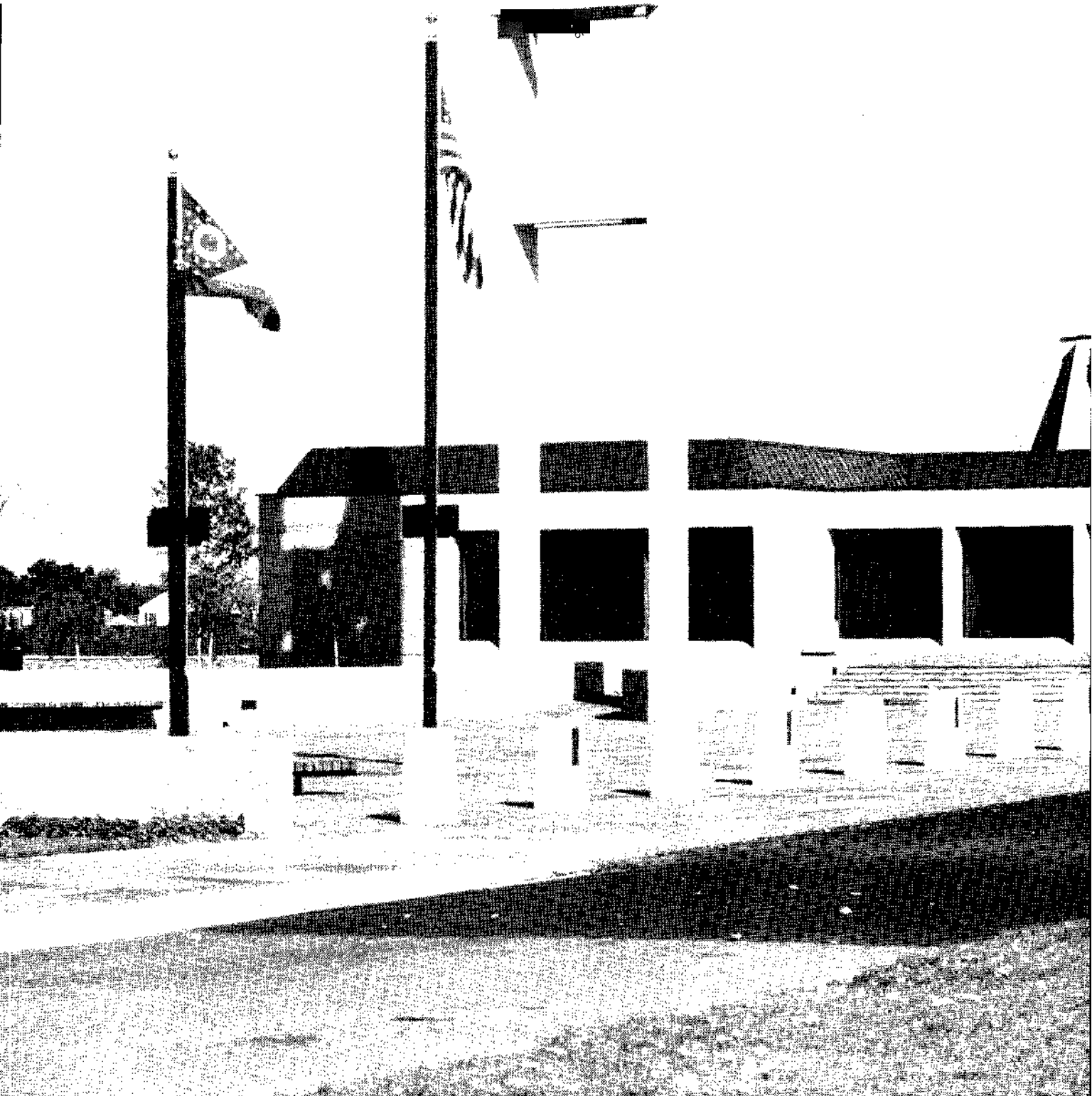

Public Facilities

The Americans with Disabilities Act (ADA) specifically prohibits discrimination against people with disabilities by any place of public accommodation. This means that people with disabilities must be able to enjoy the goods, services, facilities, privileges, advantages or accommodations provided in every public facility to the same extent as people without disabilities.

ADA requires that all public facilities be entirely accessible in compliance with ADA guidelines. Although a comprehensive discussion of every type of public facility design is beyond the scope of this publication, this section deals with a partial listing of specialized building types and some of their unique accessibility problems.

Recommendations for specific design elements such as site access, parking, interior and exterior building features, visual alarms, tactile signage, public telephones and TDDs apply to every public facility and are covered elsewhere in this publication; therefore, they are not repeated in this chapter.

An issue of recent concern has been the provision of non-smoking areas in public facilities. Any policies regarding this issue should be taken into consideration when apportioning or locating facilities such as tables in a restaurant for people using wheelchairs. The availability of accessible non-smoking areas can be critical for individuals who use respirators or have respiratory complications due to a disability.

The following facilities are considered to be places of public accommodation by ADA. Following each listing in parenthesis is the applicable section of this chapter which deals with each type of facility.

Places of lodging	(Hotels and Motels)
Establishments serving food or drink	(Restaurants and Cafeterias)
Places of exhibition or entertainment	(Museums, Areas of Assembly)
Places of public gathering	(Areas of Assembly, Stadiums and Sports Arenas)
Sales or rental establishments	(Retail Establishments)
Service establishments	(Libraries, Health-care Facilities, Financial Institutions, Post Offices)
Stations used for specified public transportation	(Transportation Facilities)
Places of public display or collection	(Museums)
Places of recreation	(Recreation)
Places of education	(Educational Facilities)
Social service center establishments	(Health-care Facilities)
Places of exercise or recreation	(Recreation)

The two keys to a barrier-free environment are participation and integration. People with disabilities must be able to participate in all activities which take place in a public facility, and all goods and services must be provided in as integrated a setting as possible.' Sensitive architectural design can make both goals possible.

Areas of Assembly

Auditoriums, Theaters, Cinemas, Lecture Halls and Places of Worship

Auditoriums, theaters, cinemas, lecture halls and places of worship all have similar functional aspects and requirements for accessibility. These facilities should be accessible for spectators, participants (speakers and/or performers), and employees who have physical disabilities.

Indoor areas of assembly should have spectator spaces specifically designed for persons who use wheelchairs. These areas should be distributed throughout the facility rather than grouped together and isolated. ADA requires that wheelchair locations be scattered so that people with disabilities have the same choice of admission prices and sight lines as those who do not have a disability.

The minimum number of wheelchair accessible spaces required by ADA is outlined below:

Total Number of Seats (Capacity)	Number of Required Wheelchair Locations
4 to 25	1
26 to 50	2
51 to 300	4
301 to 500	6
over 500	6 + 1 for each seating capacity increase of 100
for example:	
501 to 600	6
601 to 700	7
701 to 800	8
etc.	

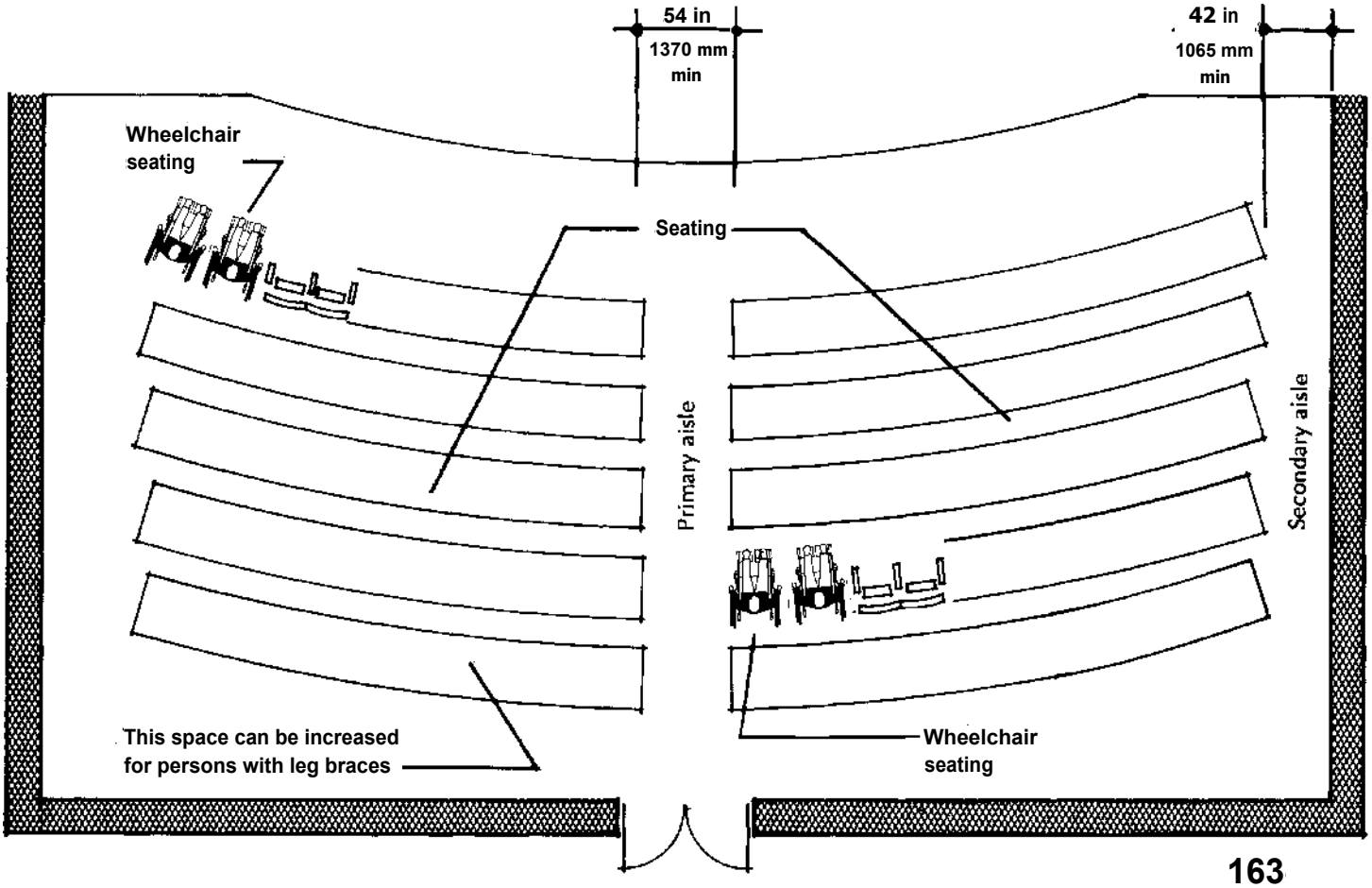

Auditorium Seating

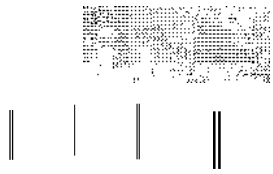

Spaces for wheelchairs should be carefully located with respect to sight lines. Because wheelchair seats are higher than standard assembly seating, sight lines for spectators sitting behind persons in wheelchairs should be calculated accordingly.

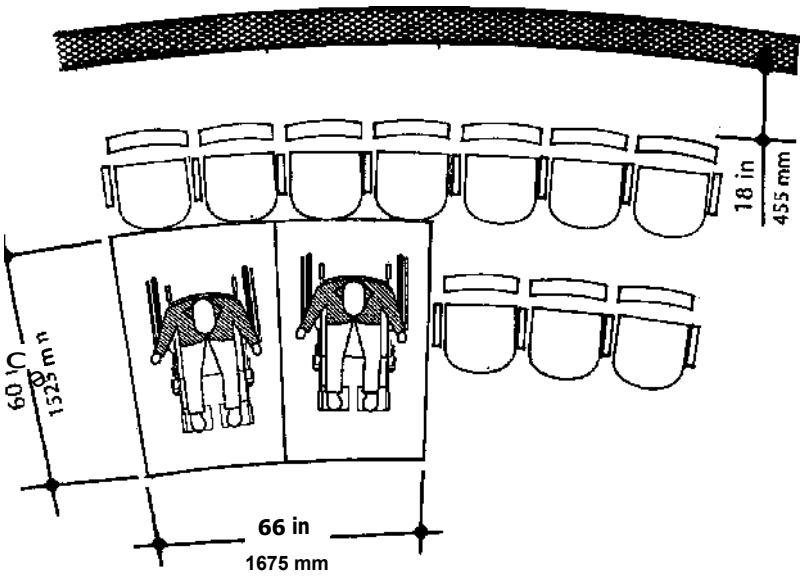

Wheelchair Seating

It is recommended that an additional 1 percent of the total number of seats have 18 to 24 inches (455 to 610 mm) of clear front floor space to allow room for people who use crutches or leg braces.

In order to ensure maximum accessibility, primary aisles of an auditorium which are a minimum of 54 inches (1,370 mm) wide, and secondary aisles which are a minimum of 42 inches (1,065 mm) wide, are recommended. The preferred width of all aisles is 60 inches (1,525 mm).[2] If aisles are sloped, they must conform to interior ramp guidelines in the section, "Interior Ramps," beginning on page 90. The number of accessible entries and means of egress must meet local codes.

In assembly areas where audible communication is integral to the use of the space (lecture halls, concert halls and playhouses), an assistive listening system (ALS) appropriate to the type of sound performance should be provided. The most common ALS devices include infrared, induction loops, and FM transmitters. In assembly areas with 50 or more fixed seats, ADA requires that 4 percent of the seats be provided with an ALS. At the very least, the appropriate number of outlets should be provided in locations throughout the facility to support a portable assistive listening system. Fixed seating which is equipped with an ALS must be located within 50 feet (15 M) of the stage and have an unobstructed view of the stage.

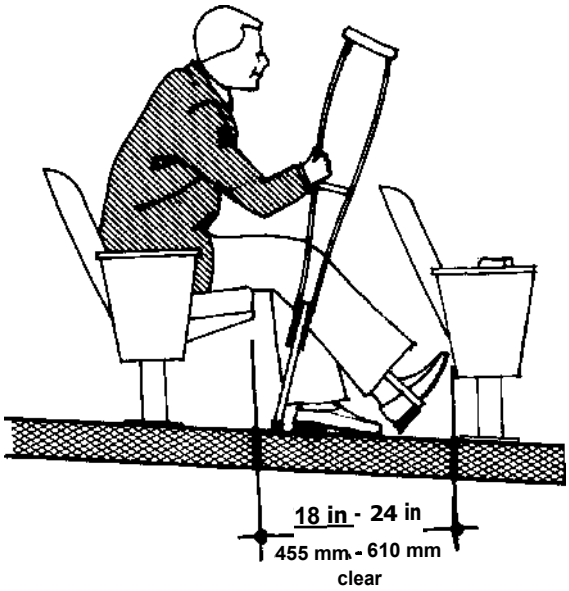

Seating for People with Crutches or Braces

Other design considerations which improve access for people with hearing impairments include seating configuration, the provision for visual aids, and proper acoustical design. A semi-circular seating arrangement or swiveling chairs facilitate lip reading as well as other forms of visual communication. In addition to provisions for the use of captioned movies, videos and slide shows, lecture halls should be set up to accommodate overhead projectors which allow the speaker to face the audience and facilitate lip reading. American Sign Language interpreters must be located where they can be seen by the entire audience, and must be adequately lit if they are to be effective. Finally, proper acoustical treatment of the assembly space benefits people whose hearing acuity is limited, such as those who are elderly.

If a lecture hall has fixed tables, accessible seating for people who use wheelchairs should be provided in the same numbers as required for auditorium seating. A 30-inch (760 mm) knee clearance and a clear width of 36 inches (915 mm) under tables is recommended. A clear space of at least 48 inches (1,220 mm) is preferred behind fixed tables so that people who use wheelchairs can maneuver easily.

All parts of an assembly facility, including public and private areas, should be barrier-free. Performance spaces such as stage areas, arena floors, dressing rooms and locker rooms should be located on an accessible route and be barrier-free. Any accessible stage or platform should be fitted with a 2-inch (50 mm) lip or curb which would prevent a person using a wheelchair from accidently rolling off.

It should be noted that places of worship are not considered public accommodations by ADA, and therefore are not subject to its accessibility criteria under Title III.' However, in Ohio, places of worship are required to conform to the OBBC, or state building code. Because ADA standards for accessibility have been incorporated into the OBBC, places of worship in Ohio are required to conform to the ADAAG.

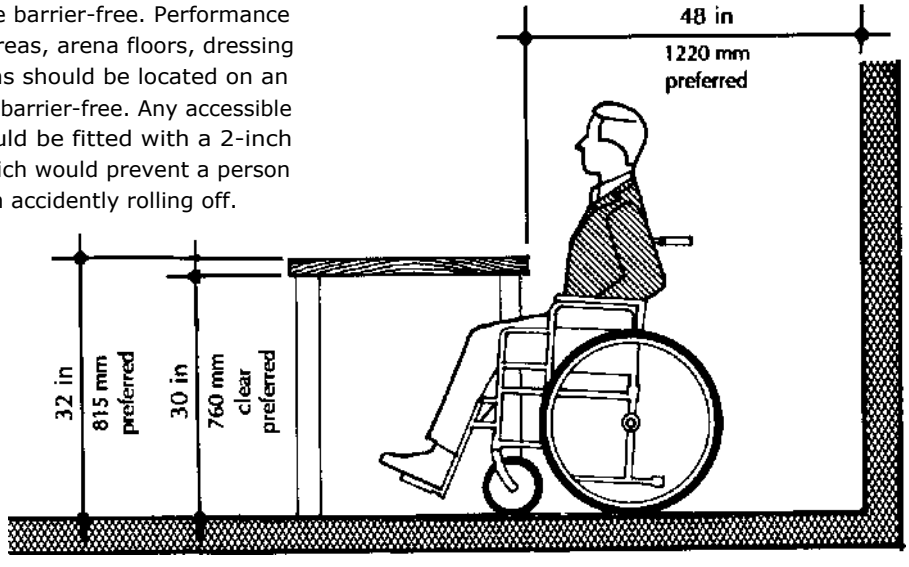

Fixed Table Clearances

Libraries

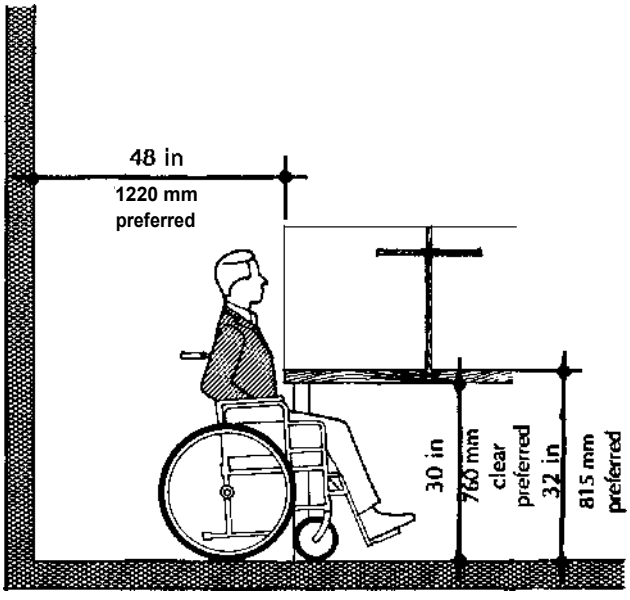

Study Carrel Clearance

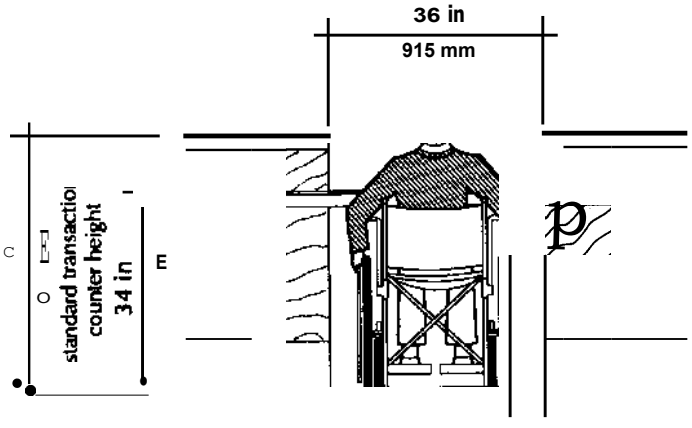

Lowered Circulation Desk

All parts of a library including reading and study areas, stacks, reference rooms, reserve areas, special facilities or collections, as well as rest rooms, telephones and parking, should be accessible for people with disabilities.

In public library reading rooms, at least 5 percent (or a minimum of one) of each element such as fixed seats, tables or study carrels are required to be accessible for people who use wheelchairs. Academic libraries are advised to reserve at least 7 percent of the available seats for persons using wheelchairs. Tables and desks which have a minimum floor clearance of 30 inches (760 mm) and a clear width of at least 36 inches (915 mm) are preferred. A clear space of 48 inches (1,220 mm) behind the study station for wheelchair maneuverability is recommended.

In addition to providing facilities for persons with mobility impairments, libraries must provide auxiliary aids for people with visual and hearing impairments. Study aids for people with visual impairments include tape recorders, books on tape, talking calculators, magnifiers, large print and braille materials, and voice-output computers.

Special aids for people with hearing impairments include computer-aided transcription services, written materials, closed caption decoders, and videotapes with open or closed captioning. It is suggested that 5 percent (or at least one) of the total number of seats or carrels be sound isolated and equipped with some of the study aids mentioned above.

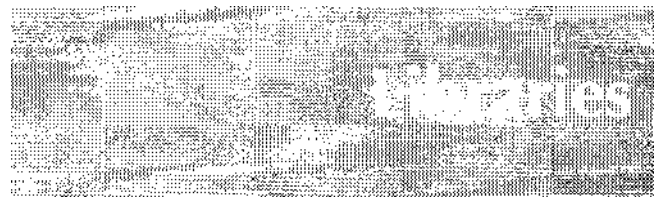

All study carrels can be made more accessible by providing book stands which facilitate page turning and locally adjustable lighting for people with slight visual impairments.

All circulation, information and check-out desks in a library should be accessible for people who use wheelchairs. ADA requires that these desks have a lowered section which is a maximum of 36 inches

(915 mm) high, although 34 inches (865 mm) is preferred; this section should be a minimum of 36 inches (915 mm) wide. The lowered section may be integrated into the design of the circulation desk, or the entire counter top could be lowered in a more universal design to avoid the appearance of a segregated area for people with disabilities. If the library is organized into separate departments such as audio/visual materials, children's books, adult reading and/or a reference section, the circulation counters in each department should also have lowered counter tops.

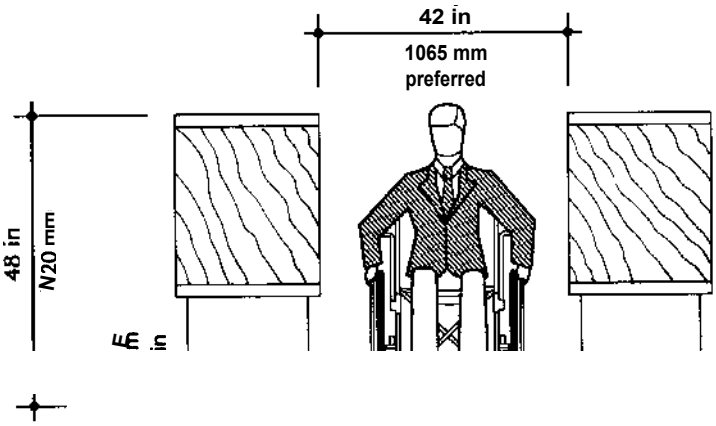

Book stacks should be planned with a preferred minimum clear width of 42 inches (1,065 mm) between stacks. All stacks should be located on an accessible route (seethe section, "Accessible Routes," beginning on page 86). Dead-end arrangements, which can potentially trap a person using a wheelchair, should be avoided unless adequate turning space is provided. Whenever possible, commonly-used materials, such as popular books, reference materials and magazines should be located between 9 and 54 inches (230 and 1,370 mm) above the floor.

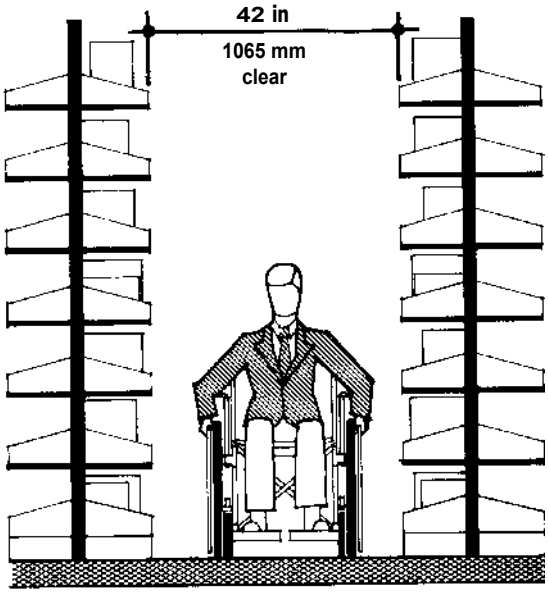

An alternative means for retrieving inaccessible materials should be provided where space limitations preclude storage within these parameters. One option would be to provide motorized rotating racks. Less expensive options include supplying tongs for reaching, or conveniently locating desks for library personnel who can then be readily available to assist people who cannot reach books on high shelves. Adequate lighting should be available in all stack areas.

Traffic control gates or book security turnstiles can be significant barriers for people using wheelchairs or with limited mobility; they can also be a serious hazard to people with visual impairments. The best solution for everyone would be an automatic gate which does not allow the removal of library materials which have not been deactivated. An audible and visual alarm should alert a person carrying activated materials before reaching the automatic gate. Manually-operated gates or turnstiles are required to have an alternative accessible passage which is adjacent to the inaccessible control device. All accessible gates or turnstiles should conform to the size, operation and clear space requirements outlined in the section, "Doors," beginning on page 80.

Card catalogs and magazine displays should be placed between 18 and 54 inches (455 and 1,370 mm) above the floor, where they are easily reached by people who use wheelchairs. A maximum height of 48 inches (1,220 mm) is preferred, as this allows a person in a wheelchair to reach items from either a front or side approach. An aisle of at least 36 inches (915 mm) is required between displays or card catalogs, but a 42-inch (1,065 mm) aisle is preferred.

Electronic (computer terminal-type) card catalogs should be located with similar criteria in mind. In addition, overhead lights may cause a glare on computer screens and limit readability for all patrons, especially those with limited vision; therefore, the location, angle and lighting of computer screens should be planned in order to minimize this potential glare. A card catalog with modifications for people with visual impairments is recommended; for instance, voice output software allows electronic catalogs to be used by people who are blind.

If assembly spaces, lecture halls or meeting rooms are provided as part of a public library, these areas must follow all of the requirements for areas of assembly, which begin on page 163 of this chapter.

Museums

If museums are to function as depositories of our cultural resources, they must be barrier-free. Paintings, sculptures, display cases and other exhibits should be arranged so that children and persons using wheelchairs can view them easily. Some museums display paintings at a 52-inch (1,320 mm) nominal height, which is an uncomfortable viewing height for most people who use wheelchairs. Alternatives for painting display include slightly tilted or adjustable frames.

Whenever possible, sculpture or other three dimensional objects should be displayed so they may be fully viewed by everyone, regardless of height or mobility restrictions. Display cases which allow three dimensional objects to be viewed from virtually every angle grant all persons a unique perspective on that work of art. Mirrors can be used to provide views of hidden sides of an art work whenever space is not sufficient for it to be seen from all sides.

Some museums have tactile galleries for persons with visual impairments. In these specialized areas, works of art (sometimes facsimiles) are displayed so they can be interpreted through touch. Other important considerations for persons with limited vision include adequate lighting levels and the legibility of informational, directional, and individual object identification or description signage. See page 123 for more specific information on legible signage.

Self-paced cassette recorders are one very effective means of guiding people through a museum or exhibition area. These portable "guides" can be valuable interpretation tools for all, and are especially helpful for people with visual impairments, or who are aging and may not wish to keep pace with an organized tour. Special cassette players which are compatible with or have built-in hearing aid devices should also be provided. Written materials, open or closed captioned orientation videos, interactive computers and dialogue on digital display are also an effective means of communication for hearing impaired visitors.

The ramp in this photograph allows access to and enhances the display of artifacts.

Educational Facilities

Schools, colleges, and universities are considered places of public accommodation by ADA, and are therefore required to conform to all ADA accessibility guidelines. All sites, buildings, classrooms and public areas of a school should be accessible as outlined in the chapters, "Site Design Features," beginning on page 50, and "Architectural Design Features," beginning on page 78.

Additional requirements specific to educational facilities may be found in this chapter and include: Areas of Assembly, page 163; Libraries, page 166; Museums and Exhibition Spaces, page 169; Restaurants and Cafeterias, page 182; and Recreation, page 187. The design of student housing should follow the recommendations of the chapter, "Housing," which begins on page 126.

Most of the dimensional requirements presented in this book are based on an "average" adult with disabilities. In designing educational facilities, it is likely that the primary user will not be a "typical" adult, with or without disabilities, but a child. It is important that the age range and sizes of the intended users be considered in addition to the basic adult accessibility recommendations.

Dimensions for children with and without disabilities are given in "Basic Human Dimension Data," beginning on page 42. Dimensions beyond adult data included in this section are stated in ranges corresponding to an age range of 5 through 13 years, or approximately kindergarten through the 8th grade. By high school age (approximately 14 years, or grade 9), children are generally approaching adult stature, and designs for such schools may follow "adult" dimensions. It is, however, always good practice to design for a range of sizes in any public facility.

Aside from basic site and building accessibility requirements, there are certain areas of special concern in the design of safe and accessible classrooms, laboratories and studios. Once again, this list is not comprehensive, but represents typical accessibility and design issues for instructional areas.

General Issues

Some areas of general concern include the layout, efficiency and maneuvering space of a classroom. Efforts should be made to minimize distracting noise and clutter through acoustic treatment and efficient storage. Ample, uncluttered aisle space benefits students who use mobility aids. Efficient classroom organization minimizes traveling distance, especially for those carrying large or bulky objects.

Students who have hearing or learning impairments will require clear, written instructions to complete assignments. If chalk or wipe-off boards are provided, they should be located in places which are easily visible from all seats. It is recommended that all writing or bulletin boards be mounted 18 inches (455 mm) from the ground with their tops at 82 inches (2,080 mm) for adults and 70 to 80 inches (1,780 to 2,030 mm) for younger students. Students with hearing or cognitive impairments will also benefit from studio or lab organization in which their desks face towards classmates, facilitating visual communication such as signing, lip reading or pointing.

Finishes

Durable finishes which do not not pose a safety threat to students are recommended for educational facilities. Floor surfaces in classrooms should be slip resistant and floor-mounted electrical outlets or other projections should be avoided, as both can be hazardous for students with mobility or sight impairments. Reflective or glare-producing surfaces are difficult to read for students with limited sight, and totally sound-absorptive surfaces make listening difficult for children with minimal hearing. Exposed heat sources and sharp objects should be insulated and protected.

Furnishings

Work stations can include desks, lab stations, computer tables and studio tables. Adjustable-height work stations are preferred, because potentially 100 percent could be made accessible for students with a variety of disabilities. It is recommended that at least 5 percent of desks, lab stations or studio tables in any classroom be accessible for people who use wheelchairs. For adults, tables with a knee space 30 inches (760 mm) high by 36 inches (915 mm) wide, and a maximum table height of 32 inches (815 mm) are preferred. For younger students (ages 5 to 13), knee space requirements will vary from 18 to 24 inches (455 to 610 mm) in height, with a maximum table height of 20 to 26 inches (510 to 660 mm). Tables with center drawers may interfere with wheelchair arms and are not recommended. In all cases, a clear space of at least 48 inches (1,220 mm) should be provided behind work tables to provide maneuvering room for people using wheelchairs.

The work station design can help ensure safety and accessibility for all students. Sharp edges and corners are particularly hazardous for students with visual impairments and should be avoided on all desks, stations or tables. Students with limited strength and mobility will benefit if work surfaces are smooth enough to facilitate sliding heavy or bulky objects. Fixtures, guides, bolts, clamps, non-slip mats, velcro or magnetic fasteners may be used where equipment or work materials must be stabilized on smooth surfaces. In addition, students with limited hand function will benefit from a 1-inch (25 mm) lip which will confine spills and keep supplies or educational materials from falling to the floor. Students with poor balance or limited strength will benefit from support bars or handles which are firmly anchored to the desk or worktable.

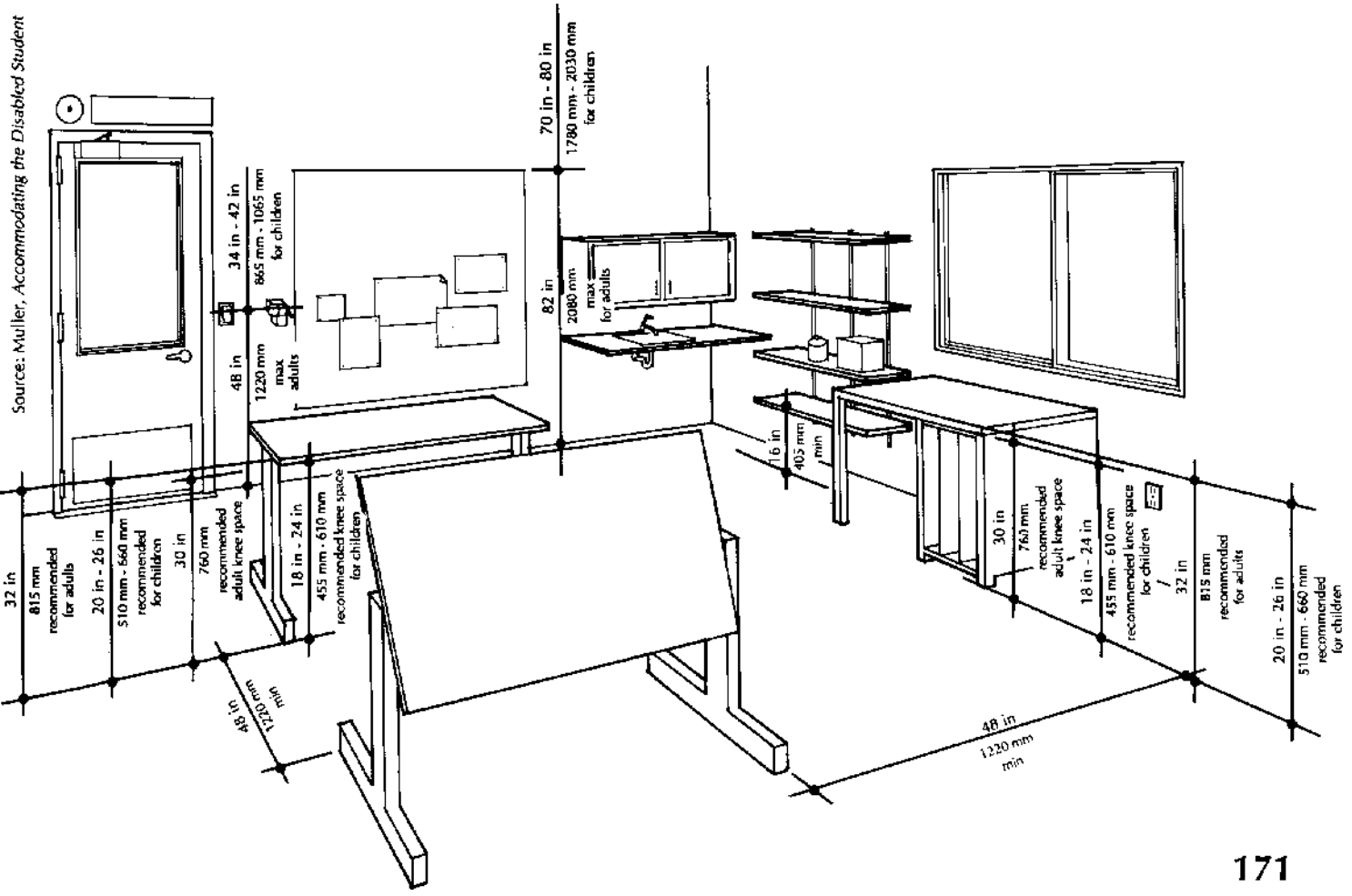

Source: Muller, *Accommodating the Disabled Student*

Accessible Studio Classroom

Secluded work areas where students may miss important instructions or information are not recommended in the design of classrooms. All students will benefit from areas adjacent to desks for storage of mobility aids such as crutches or canes and carrying aids such as shoulder or crutch bags.

Work surfaces with seating for students with limited stamina or strength are recommended in laboratories or studios where students are required to stand for significant periods of time. Seating designed with full arms and a backrest with a stable base which allows a student's feet to rest on the floor or another support is preferred.

Computers

Computers can be found in most classrooms today, from kindergarten through university level. Making computers accessible for students with a variety of disabilities requires a broad range of adaptive aids and software. An in-depth discussion of all of the possibilities is beyond the scope of this book, but the designer should be aware that most of these aids, in addition to standard computer components, will require extra space.

For example, extra space will be required in order to provide printers with large type or braille output in addition to standard output printers. Computers with speech output, or alternative input methods such as light pointers or mouthsticks, may be required for use by students with a variety of disabilities. A rehabilitation engineer should be consulted early in the planning of any school project. The engineer can help determine what types of devices are currently required, as well as assist in planning and allocating space for future needs. Above all, computers must be accessible for all students; that is, located on accessible tables in accessible areas.

Storage

Providing adequate counter tops and storage space in each classroom allows the room to be open and free of clutter. All storage intended for use by adults and students with disabilities should be provided within the reach ranges outlined in the chapter, "Basic Human Dimension Data," beginning on page 42. Other storage may be provided outside those ranges if it is to be used only by a teacher or staff member who has no disabilities. Storage areas for hazardous materials and sharp objects should be clearly labeled with visual, pictorial and tactile signage, and should be under the supervision of a teacher or staff member.

Storage cabinet doors which are hinged on the side and do not open up or down are preferred. Cabinet handles should be easy to operate without the need to twist or grasp. Lazy Susan-type storage trays such as those recommended for kitchens on page 144, will increase accessible storage space significantly. Drawers which are deeper than 12 inches (305 mm) may not be usable by students with reach limitations.

Any sinks which are integrated into classroom cabinets should follow the recommendations for piping insulation, height, knee clearance, and controls as outlined for rest room sinks on page 110 and for kitchen sinks on page 142. The optimum work height and knee clearance for children between 5 and 13 years are illustrated in the figure below.

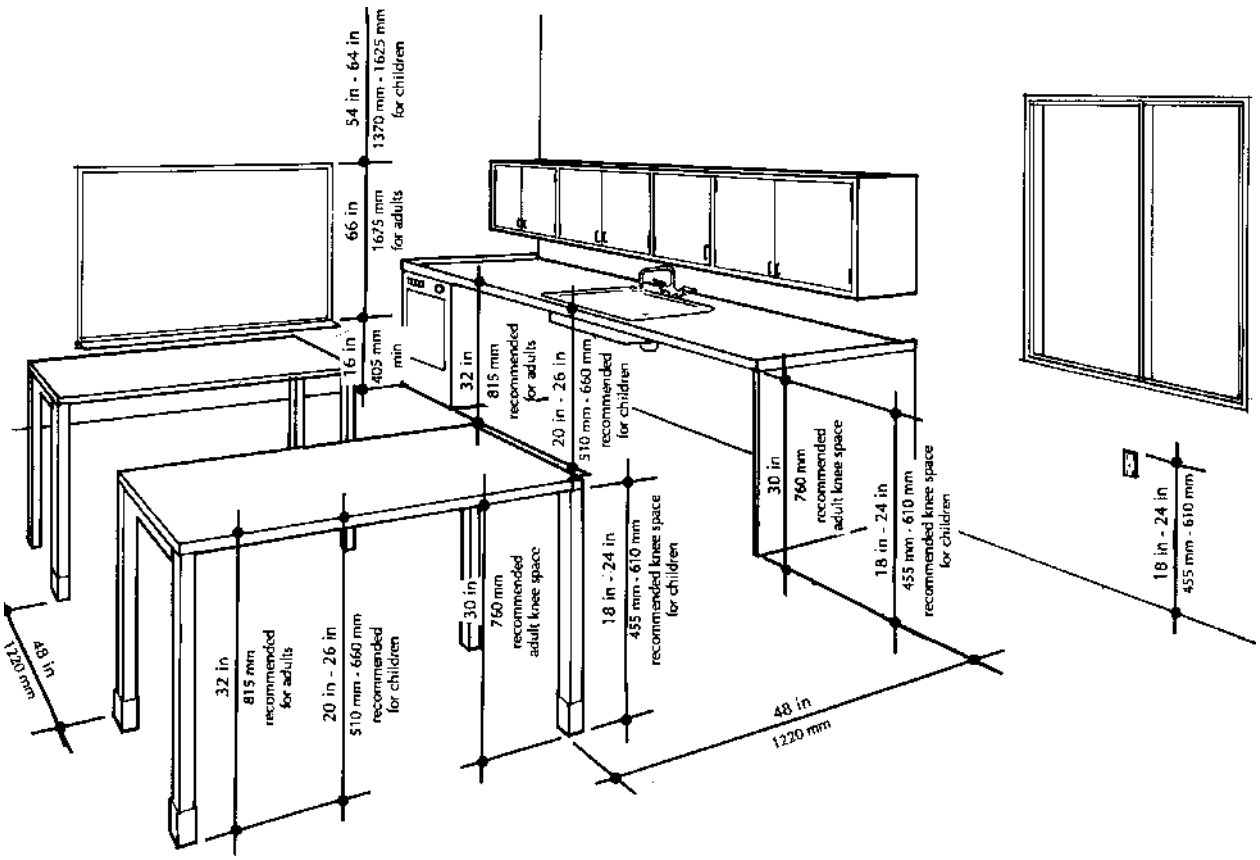

Accessible Laboratory Classroom

Locker Facilities

Lockers should be accessible for all students. Students who use mobility aids should be able to position themselves parallel to the wall when using their lockers, because this allows the maximum amount of reach into their lockers. A clear space of 48 by 30 inches (1,220 by 760 mm) will allow such a parallel approach. Thus, although some lockers may be located right next to a corner or intersecting wall, only those which are at least 24 inches (610 mm) away from that wall or corner will be accessible. Locker areas should be located on an accessible route, and access to them should not be blocked by benches or other objects.

Clothes hooks, rods or shelves in full-height accessible lockers should be located no higher than 48 inches (1,220 mm) and no lower than 9 inches (230 mm) for adults. It is recommended that accessible children's lockers allow for reach ranges as described in "Basic Human Dimension Data," beginning on page 42. Items within these ranges can be reached by everyone and space above or below may be used by students without disabilities.

Where half-height or smaller lockers are provided, it is recommended that at least one row of each group be located within the reach ranges discussed above. Latches should be easy to operate, even by students with limited hand function or sight, and should be operable with one hand. Built-in combination locks which feature large clear numerals on contrasting backgrounds are preferred. It is recommended that locks with braille or tactile numbers be made available to students with severe sight limitations.'

Signage, Alarms, Public Address Systems, and Controls

General information on these subjects can be found in the chapter, "Architectural Design Features," beginning on page 78; however, these recommendations are based on adult dimensions. Some adjustments to these guidelines will ensure accessibility for younger students.

It is recommended that all classroom signage be both visual and tactile. Clear pictorial signage can be especially important for students who have learning impairments. Signage located at the eye level of a person in a wheelchair, approximately 48 inches (1,220 mm) for an adult and between 39 and 42 inches (990 and 1,065 mm) for younger students, is preferred. Tactile and braille signage should be located at 60 inches (1,525 mm) for adults. It is recommended that additional tactile or braille signage be provided between 42 and 52 inches (1,065 and 1,320 mm) high for children.

Public address systems which are accessible for people with hearing impairments are preferred. A computerized "banner" or message display system is one method of relaying PA information to students who are deaf. Another method is to provide each teaching space with a television or video monitor and decoder to provide captioned messages.

All classrooms should have visual and audible alarms, and these must be effectual from all seating areas or work stations. Class bell systems with some sort of visual notification to indicate when a bell is ringing are preferred.

Controls should be designed to minimize the need for twisting, grasping or straining to utilize. All switches and controls should be located between 36 and 48 inches (915 and 1,220 mm) from the ground for adults, and at 42 inches (1,065 mm) or lower for younger students. It is recommended that controls which require visual setting, such as dimmers or thermostats, be located at the eye level of a seated person.

Health-care Facilities

Health-care facilities include places where people receive physical or medical treatmentor care such as a doctor's office or emergency room, as well as facilities where patients may stay longer than 24 hours such as general hospitals or long-term care facilities. The design of health-care facilities, especially on a large scale, is a highly specialized field, and hospital design experts should always be consulted. This section covers a few basic areas in which accessibility is critical.

ADA requires that at least 10 percent of patient rooms and toilets in a general hospital be accessible. In a long-term care facility, 50 percent of the rooms and all public or common areas must be accessible. Given the proportionally large number of people with disabilities (temporary or otherwise) who are likely to be using a medical care facility, it would be advisable to make accessible as many of the rooms as possible. All patient rooms and toilets are required to be accessible in facilities designed especially for the treatment of people with mobility impairments.

In addition to general site and building accessibility requirements outlined in other chapters of this book, the following special criteria should be applied to accessible patient rooms.

All health-care facilities, from drop-in clinics to specialized hospitals, must be accessible.

Patient Rooms

Each accessible room should have a door which meets the criteria outlined on page 80. In addition, adequate maneuvering space to allow a person in a wheelchair to turn a full 360-degree circle, which would be 60 inches (1,525 mm) in diameter, should be provided. In a room with two beds, this turning space should be provided between the beds. A minimum clear floor space of 36 inches (915 mm) and a 36-inch (915 mm) clear accessible route should be provided on each side of each bed.

Patients who have a disability or are aging should be provided with adjustable beds which allow the mattress to be lowered to a height of 18 inches (455 mm), which is approximately the height of an average wheelchair seat. This will assist patients who use wheelchairs or who use other mobility aids to transfer onto or sit on the bed.

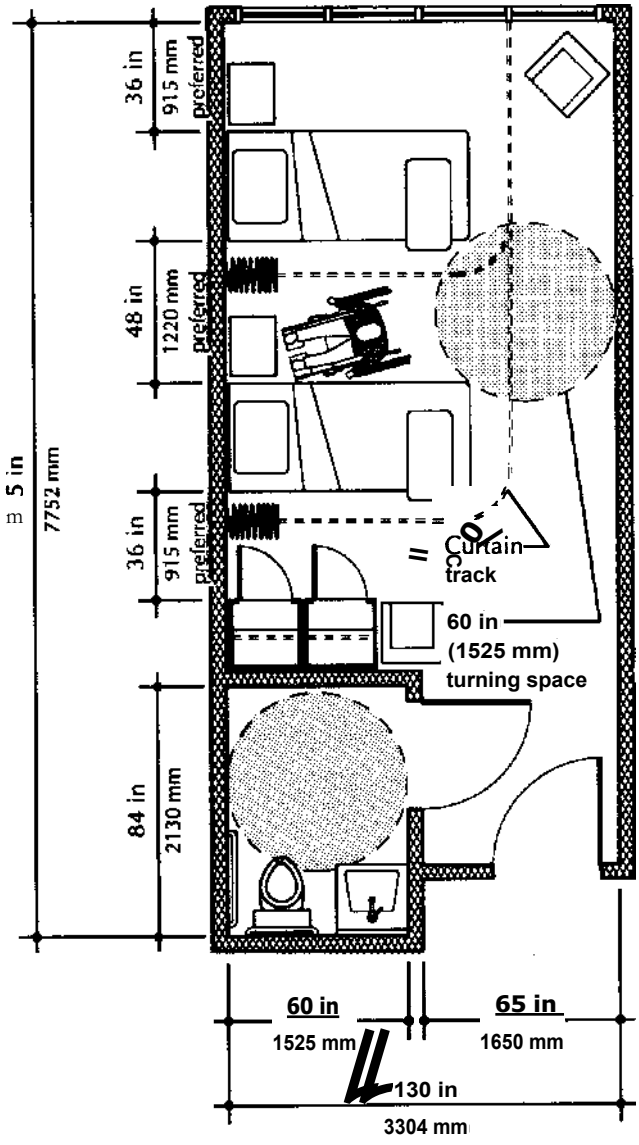

Accessible Hospital Room

It is recommended that controls for adjustable beds, light switches, emergency call signals, telephones and television remote controls be located within easy reach of a patient in bed (see the diagram on page 149). ADA requires that closed caption decoders, which require an extra outlet near the television, be made available for patients with hearing impairments. TDDs and closed caption decoders[6] should be available in all rooms and adequate outlets should be provided near bedside tables for these and other portable or personal devices. Signal activation devices such as push-switches, pressure pads, movement detectors and electric eye switches will accommodate various patient disabilities.

Patient Toilet/Bath Rooms

Each accessible room should have an adjacent accessible patient toilet/bath room, which is located on a minimum 36 inch (915 mm) wide accessible route. See the section, "Toilet Rooms," beginning on page 106 for guidelines on accessible bathrooms.

Signage

The organization of large health-care facilities is often complex and many appear to have a maze of corridors, building wings and tunnels which present a challenge to healthy, sighted people without disabilities. People who are ill or experience mobility, sensory or cognitive limitations may become confused and hopelessly lost. Clear, concise signage is extremely important in such facilities. All signage should follow the guidelines outlined in the section, "Interior Signage," beginning on page 123. Color coding and simple graphics can also make a complex building arrangement more understandable for everyone.

Financial Institutions

At least one service desk, teller station and automated teller machine (ATM) in every financial institution should be designed for accessibility. An accessible route should connect the entrances with all accessible spaces and elements within the facility.

An accessible teller station and service desk should be a minimum of 36 inches (915 mm) in length and have a maximum height of 36 inches (915 mm) above the finished floor. A knee clearance at least 27 inches (685mm) high, 30 inches (760 mm) wide and 19 inches (485 mm) deep should be provided.

ATMs and night depositories should be positioned to allow the control latch or door to fall within the preferred range of 15 to 48 inches (380 to 1,220 mm) above the ground for maximum low and high forward reaches. See the chapter, "Basic Human Dimension Data," beginning on page 42 for more on recommended reach ranges. Braille or tactile keys and voice output instructions could make walk-up teller machines usable for people with sight impairments. If voice output instructions are employed, some provision should be made for the security of the transaction. An enclosure which is operable by the ATM card is one possibility.

Drive-thru banking facilities, either teller-operated or automated teller machines (ATMs), are a convenience for all persons.

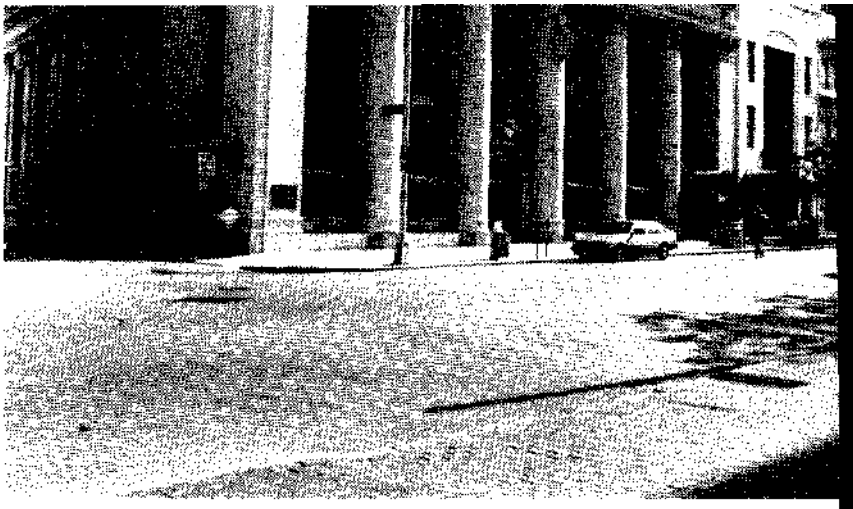

Post Offices

Postal facilities are similar to financial institutions in their accessibility requirements. Service window and service desk requirements listed within "Financial Institutions" (above) are applicable.

In addition, mail deposit slots and package deposit hoppers should fall within the preferred range of 15 to 48 inches (380 to 1,220 mm) above the ground for maximum low and high forward reaches. See the chapter, "Basic Human Dimension Data," beginning on page 42 for more information on recommended reach ranges.

Operating controls on stamp vending machines and post office boxes should also meet the requirements described in "Conveniences and Controls," beginning on page 116.

Outside the post office, drive-up mailboxes provide convenient service for all.

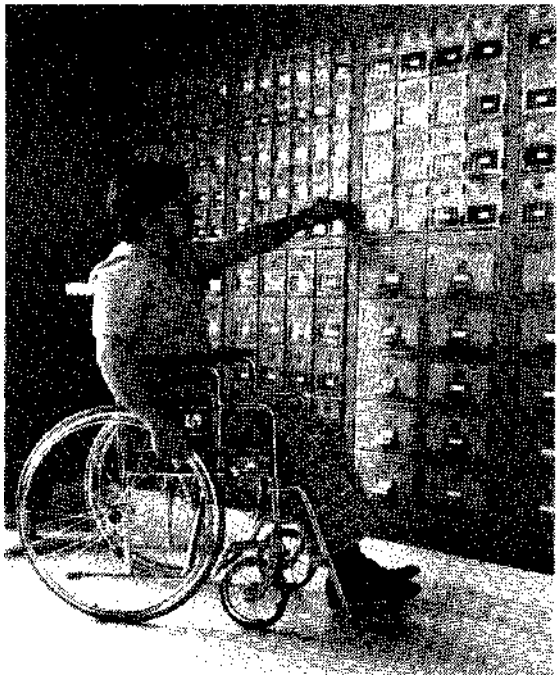

Hotels and Motels

All guest rooms and public areas in hotels and motels should be as barrier-free as possible. It is recommended that at least 5 percent of available guest rooms be fully accessible, especially to people who use wheelchairs. Ideally, every room should have a roll-in shower, which is the type of shower most easily used by all people. If it is not possible to provide such showers in all accessible rooms, ADA requires they must be provided in the minimum number of rooms listed below:

Number of Rooms	Accessible Rooms	Rooms with Roll-in Showers
1 to 25	1	1*
26 to 50	2	1*
51 to 75	3	1
76 to 100	4	1
101 to 150	5	2
151 to 200	8*	2
201 to 300	12*	3
301 to 400	16*	4
401 to 500	20*	4 + one for each additional 100 over 400
501 and up	4% of total*	1% of total

** Indicates a recommendation above the ADA minimum. The above recommendations are intended to provide a total number of accessible rooms (including those with roll-in showers) equal to approximately 5 percent of the total number of rooms. In facilities with less than 150 units, this percentage had to be adjusted upward to meet or exceed ADA minimums.*

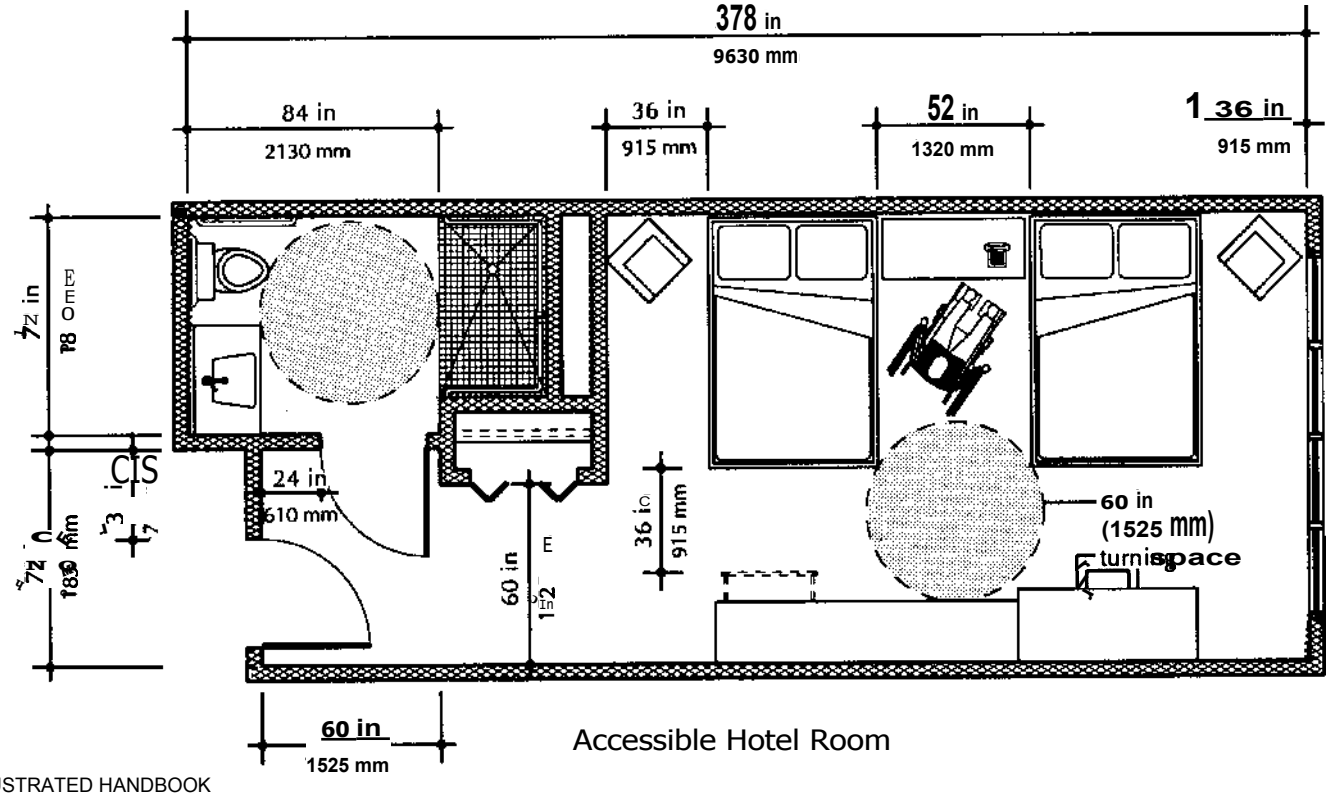

Accessible Hotel Room

Segregating or grouping accessible units into one designated area of a hotel violates the ADA intent of providing integrated settings for people with disabilities. Such an arrangement also increases security risks: people with disabilities and elderly people may be more vulnerable to crime, and designating a single block of rooms for them creates an easy target. This is one instance in which accessible room signage may not be the best idea. A better solution would be to provide accessible hardware and dual height peep holes on all hotel room doors to avoid identifying accessible rooms along public routes.

ADA also requires that people with disabilities be given the same choices among various classes of sleeping accommodations which are available to people without disabilities. When non-smoking rooms are provided for hotel guests, it is recommended that a proportionate number of these rooms be accessible. The only way to provide this choice, ensure security and avoid singling out people with disabilities is to integrate accessible units throughout the building.

All accessible rooms must be located on an accessible route (see page 86 for requirements). It is also recommended that accessible rooms be located to minimize travel distance to accessible parking and other guest facilities, with as much of this route as possible under cover. Extended canopies at vehicular drop-offs and covered outdoor walkways increase comfort and convenience for everyone.

Accessible sleeping areas should have a minimum clear maneuvering space of 36 inches (915 mm) on each side of the bed. Where a room has two beds, ADA allows a single 36-inch (915 mm) aisle between the beds. A 48-inch (1,220 mm) aisle between beds is recommended, as this allows guests using wheelchairs or other mobility aids to approach the bedside table at an angle,' increasing their range of reach beyond that afforded by a frontal approach (see the chapter, "Basic Human Dimension Data," beginning on page 42). In addition, space which allows a 60-inch (1,525 mm) turning radius for people using wheelchairs should be provided somewhere in the room or suite.

Ideally, all storage areas, furniture and closets should be accessible. Additional storage beyond the reach of a person using a wheelchair may be provided, as long as at least one of each type of storage element is accessible. More information on storage may be found in "Closets" and "Storage," beginning on pages 135 and 155 respectively.

McGuire-Willis & Associates, Columbus, Ohio

A choice of counter heights at a registration desk better serves the needs of people with a variety of disabilities. A lowered counter section, such as that shown in the diagram on page 181, is the preferred solution.

All controls should be operable by a person with limited mobility, and should be located as outlined in "Conveniences and Controls," beginning on page 116.

An accessible bathroom, as discussed in the section, "Bathrooms," beginning on page 151, should also be provided for each unit.

Any carports, garages, or parking spaces associated with accessible hotel or motel rooms should be designed in accordance with the parking specifications in "Parking and Vehicular Considerations," beginning on page 54.

If kitchens, kitchenettes or wet bars are provided as accessories to accessible rooms, these areas should be designed to meet the requirements for kitchens, beginning on page 136.

ADA also requires that the number of rooms listed below be made accessible for people with hearing impairments:

Number of Rooms	Accessible Rooms
1 to 25	1
26 to 50	2
51 to 75	3
76 to 100	4
101 to 150	5
151 to 200	6
201 to 300	7
301 to 400	8
401 to 500	9
501 to 1000	2% of total
1 001 and over	20 + 1 for each 1 00 over 1000

These rooms must be provided ***in addition*** to those rooms designed for people with mobility impairments.

Hotel rooms for people with hearing impairments must include visual alarms and visual notification devices which alert the occupant of incoming telephone calls, a door knock or bell ring. Detailed specifications for audible and visual alarms can be found in Section 4.28 of ADA.

The easiest way to make all hotel rooms accessible for people with hearing and sight limitations is to provide outlets in each room for portable notification devices. One of these outlets should be connected to the central alarm system to allow notification in the event of an emergency. Telephones in such rooms must have a volume control and have an accessible outlet within 48 inches (1,220 mm) of the telephone connection to facilitate the use of a portable text telephone, which must be provided by the manager. A minimum number of portable notification devices with visual and audible signals must also be provided by the hotel manager. Others can be provided by the guests themselves, especially if they have unique needs.

Closed caption decoders must be provided in hotels which have a television in five or more rooms. These devices may be provided in all rooms, or portable ones must be available at the front desk. In either case, all televisions must be wired to accept the decoders, and an extra accessible outlet should be provided near the television set for these devices.

It is recommended that ***all*** rooms in a hotel be equipped to be used by people with hearing and sight impairments, as these accommodations are actually quite minimal. It is also possible that a guest with a mobility impairment may also have a hearing or sight impairment, and when guests who are aging are considered, the number of potential guests who may require modifications for hearing or sight impairment increases dramatically.

Special attention must be called to the design of the "public space" areas of hotels and motels, especially to public rest rooms, meeting rooms and convention facilities. All public sections of the facility should be properly designed and contain the appropriate equipment to make them accessible for all people. Public areas should meet all of the accessibility requirements outlined in the chapter, "Architectural Design Features," beginning on page 78.

The front check-in desk is an area of special concern in accessible hotel and motel design. Frequently, these desks are as high as 42 inches (1,065 mm), which not only makes them intimidating, but makes their surface almost impossible for short people or people who use wheelchairs to reach across or write upon.

Accessible counters or sections are required to be at least 36 inches (915 mm) long. The preferred maximum height is 34 inches (865 mm), and a knee space at least 30 inches (760 mm) is recommended.

ADA requires that one of three alternatives be implemented to provide a counter which may be used by people who use wheelchairs.[9] The preferred alternative is to include a lowered section at the main front desk area; a lowered counter provides a surface which is convenient for all guests, including guests in wheelchairs, to open a purse or briefcase. In order to avoid the appearance of a segregated counter, the lowered area may be carefully integrated into the entire counter design. The entire counter could also be built with a lower, more universal profile.

All meeting and conference facilities, if provided, should be accessible for people with mobility, sight, hearing and other types of impairments. See the section, "Areas of Assembly," beginning on page 163 for information on accessible conference facilities.

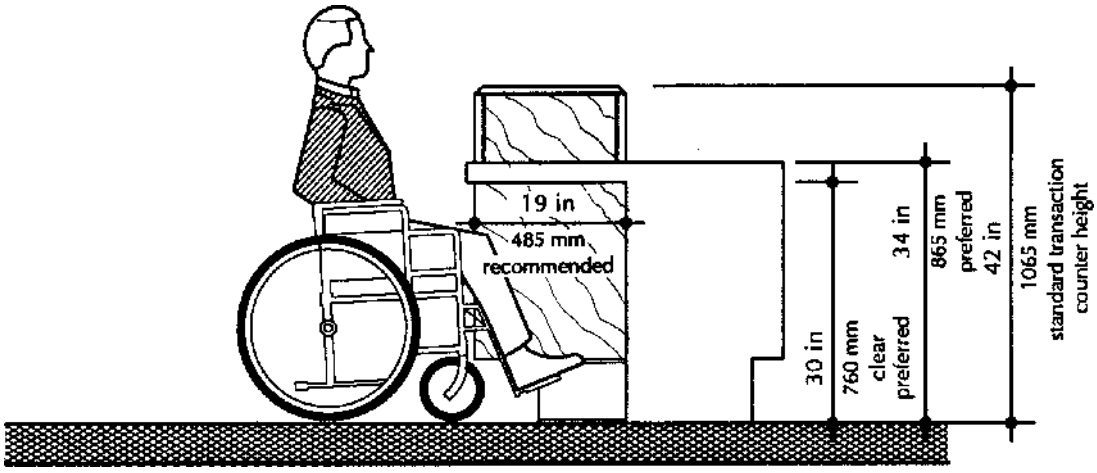

Accessible Registration Desk

Restaurants and Cafeterias

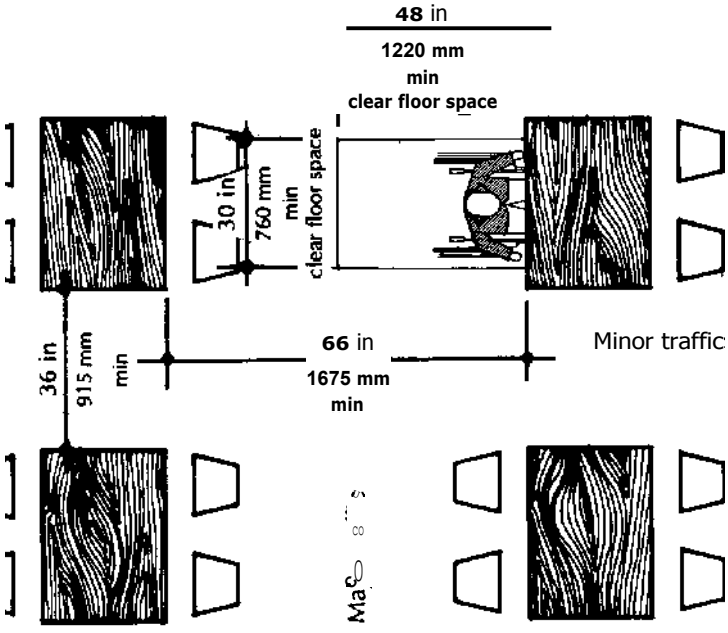

Conditions which make restaurants inaccessible include table crowding and table height. ADA requires that at least 5 percent of the tables in a restaurant or cafeteria be accessible for persons who use wheelchairs. It is recommended that accessible tables provide a knee clearance at least 30 inches (760 mm) high by 36 inches (915 mm) wide under a table no greater than 34 inches (865 mm) high. A clear space of at least 30 by 48 inches (760 by 1,220 mm) should be provided at each wheelchair location. Accessible tables should not be segregated, but scattered throughout the facility. If smoking and non-smoking sections are designated in a restaurant, adequate accessible tables should be provided in both areas.

It is recommended that fixed chairs/seats be avoided whenever possible. Fixed chairs can be extremely difficult for people with various mobility impairments to use. Fixed seats also require that spaces be left at set locations to provide room for people using wheelchairs, not allowing them the seating choices available with movable seating.

With both fixed or movable seating, aisle requirements are critical for wheelchair access. Main aisles that are 66 inches (1,675 mm) or wider and side aisles at least 36 inches (915 mm) wide are suggested.

In new construction, all dining room areas (including raised, sunken, or outdoor areas) should be accessible. Even if ramps are provided, raised and lowered areas can be hazardous for people with visual impairments, as well as to servers with full trays, and are best avoided. In alteration projects, it is not required that multiple levels be made accessible, as long as the same quality of service and decor are provided which are available in other, barrier-free areas.

Some restaurants have bars or counters where food and drink are consumed from high stools or a standing position; these bars generally exceed 34 inches (865 mm) in height. In a fully-accessible restaurant, a 60-inch (1,525 mm) portion of each such counter, no higher than 34 inches (865 mm), is required for use by people who use wheelchairs. A preferred height for such counters is 32 inches (815 mm).

Cafeteria-style food service lines must have a minimum clear width of 36 inches (915 mm), however a 42-inch (1,065 mm) aisle is preferable. If the serving line turns any corners, adequate maneuvering space should be provided. Cafeteria tray slides should be no higher than 34 inches (865 mm). If self-service shelves or dispensing devices for food, beverages, condiments, tableware or dishes are provided, at least 50 percent of each type of shelf or dispenser should be located within the reach of a person using a wheelchair. These reach ranges are up to 54 inches (1,370 mm) where a side approach is possible, and up to 48 inches (1,220 mm) where a front approach is required. Self-service beverage and water dispensers which permit a glass to be filled without holding it are suggested.

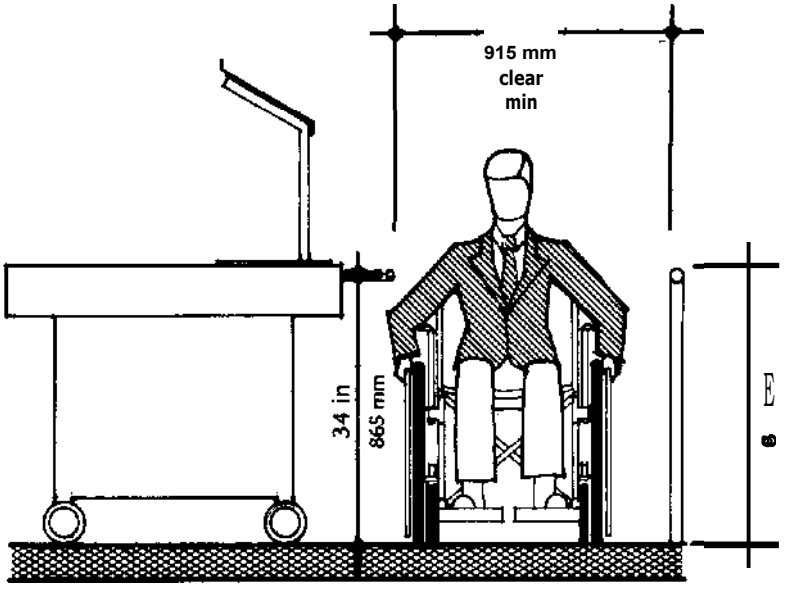

Fast food restaurant counter lines which are controlled by bars, chains, pipes or cords are virtually inaccessible for people who use wheelchairs and create a hazard for people with visual impairments. It is strongly recommended that these be avoided whenever possible. If such crowd control is required, aisles between the rails must be at least 36 inches (915 mm) wide, with 42 inches (1,065 mm) preferred. Adequate turning space must be provided where lines turn corners.

Drive-through windows are a great convenience for everyone, but cannot be used by people with hearing impairments, unless assisted by an interpreter. Computer interactive menu boards,[10] captioned screens, or vacuum tube service would enable people with hearing impairments to independently use drive-through services. It is recommended that all drive-through windows provide a minimum vertical clearance of 114 inches (2,905 mm) and a minimum width of at least 120 inches (3,060 mm) to accommodate the extra height of special vans with raised roofs and wheelchair lifts.

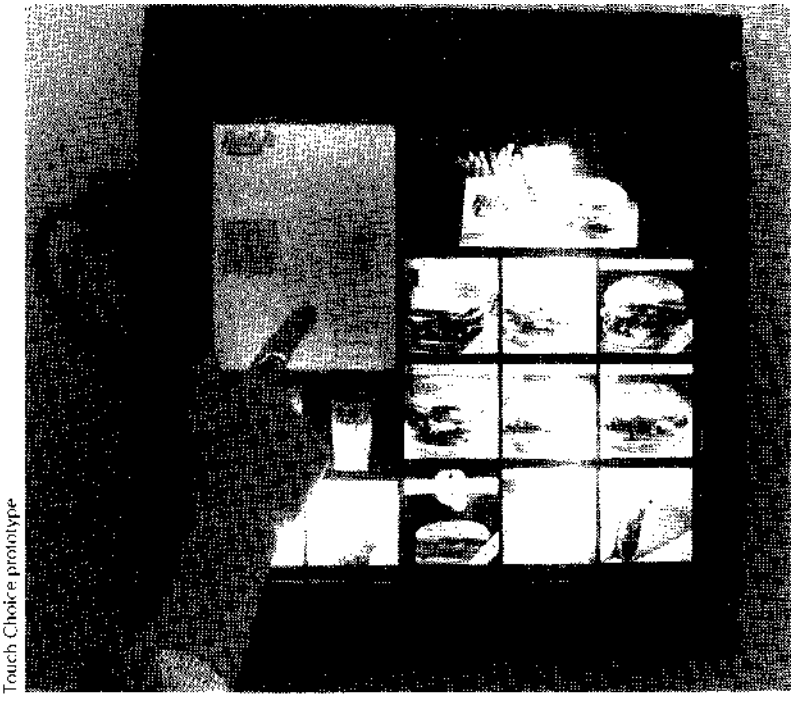
Touch Choice prototype

Interactive video technology such as a menu board is especially helpful for people with hearing, speech and cognitive impairments and provides an ordering system which can be used by all customers.

Stadiums, Sports Arenas and Amphitheaters

Stadiums, sports arenas and amphitheaters should have modified spectator locations reserved for persons using wheelchairs, crutches, leg braces or other mobility aids. Each location should be made an integral part of the fixed seating arrangement in the arenas. Readily-removable seats could be installed in modified spaces when the spaces are not required to accommodate users with disabilities.

An accessible route should adjoin all modified seating locations and provide a means of egress in case of emergency; the route should also connect performing areas, including stages, arena floors, dressing rooms, locker rooms and other spaces used by performers.

In order to ensure maximum accessibility, it is recommended that primary aisles of an arena be a minimum of 54 inches (1,370 mm) wide and the secondary aisles be a minimum of 42 inches (1,065 mm) wide. The preferred width of all aisles is 60 inches (1,525 mm).

Modified seating as well as access routes to their location should be clearly marked. Designated routes should be via properly-designed ramps. See the sections, "Outdoor Ramps" and "Interior Ramps," beginning on pages 61 and 90 respectively, for further information.

Modified seating for people with disabilities must be carefully located with respect to sight lines — for both people using the modified seating area and people in front and in back of the modified seating area. Many persons attending sporting events tend to leap to their feet at times of interesting or critical play. This should be taken into account when designing seating in front of spaces reserved for persons with disabilities.

Modified seating should be provided in more than one location to allow people with disabilities a choice of admission prices and lines of sight comparable to those for the general public. The required number of seats for people who use wheelchairs can be found in the chart on page 163 of this chapter. In addition, it is recommended that 1 percent of the total number of seats be available for people using crutches or leg braces, which requires 18 to 24 inches (455 to 610 mm) of clear space in front of the seats. See the earlier section, "Areas of Assembly," beginning on page 163 for other design considerations.

Accessible parking should be located as close as possible to an arena. If parking structures are to be used, overhead clearance for specially-modified vans used for transporting persons in wheelchairs is important. Site design access issues are discussed in the chapter, "Site Design Features," beginning on page 50.

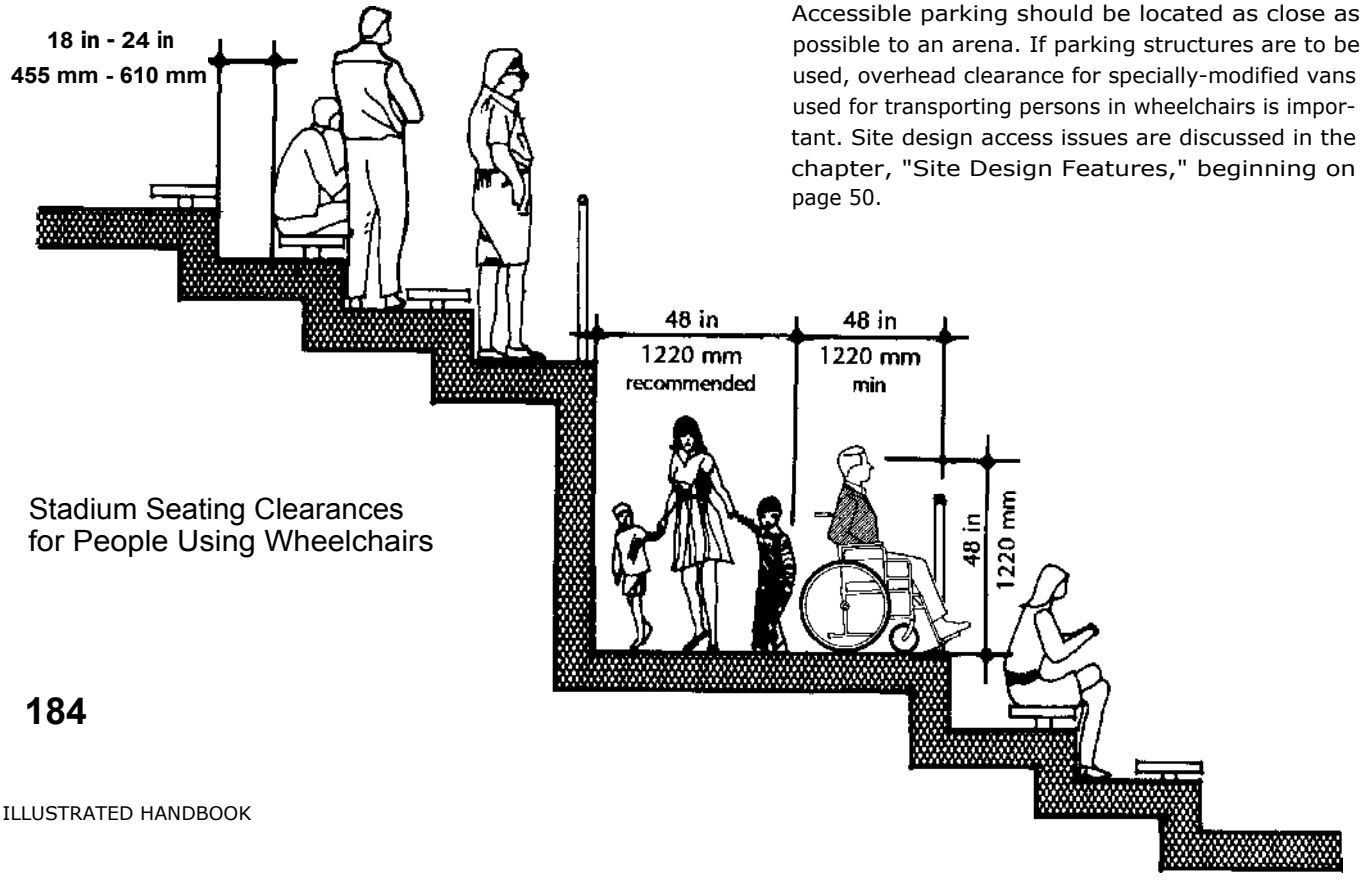

Stadium Seating Clearances for People Using Wheelchairs

Business Establishments

Places which conduct public business, including but not limited to retail/wholesale stores or personal service facilities such as dry cleaning stores or hair cutting salons, must be accessible.

Counters used for cash registers or for the distribution of goods or services to the public should be located on accessible routes. Provide each different activity with at least one counter that includes a section at least 36 inches (915 mm) wide which is a maximum of 36 inches (915 mm) from the finished floor. These counters should be dispersed throughout the building and integrated with the traditional height counters. Digital display cash registers should be used.

Accessible dressing rooms entered through a swinging, curtained or sliding door should provide a minimum clear space of 60 square inches (1,525 square mm), which will allow a person using a wheelchair to make a 180-degree turn. No door should swing into any part of the turning space. See the section, "Doors and Doorways," beginning on page 80 for further information.

Private dressing rooms with clear floor space meeting the recommended space allowance and reach ranges found in the chapter, "Basic Human Dimension Data," beginning on page 42, may be accessed through a curtained opening at least 32 inches (815 mm) wide.

A bench should be provided in every accessible dressing room. It should measure 24 by 48 inches (610 by 1,220 mm) and should be affixed to the longer wall. The bench should be mounted 17 to 19 inches (430 to 485 mm) above the finished floor. Clear floor space should be provided alongside the bench to allow a person using a wheelchair to make a parallel transfer onto the bench.

When mirrors are provided, they should be full-length, measuring at least 18 inches wide by 54 inches high (455 by 1,370 mm); they should be mounted so that either a standing person or person seated on the bench may see their reflection.

Turnstiles for pedestrian control should not be used. Bollards or other fence-type barriers used to contain shopping carts near store entrances also should not be used. These are insurmountable barriers for persons using wheelchairs.

It is recommended that aisles be at least 48 inches (1,220 mm) wide to allow a person walking and a person in a wheelchair to pass each other. A preferred aisle width of 60 inches (1,525 mm) allows a person in a wheelchair to make a (tight) 180-degree turn.

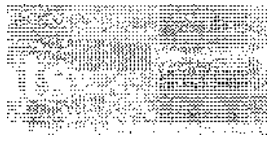

Accessible check-out lanes should be at least 36 inches (915 mm) wide, and counter heights should be restricted to a maximum of 36 inches (915 mm) above the finished floor. Signage should also be clearly mounted above the check-out aisle at the same location where the check-out number or type of check-out is displayed.

Wherever possible, merchandise should be stocked with the heavier items on lower shelves. All shelving should be located within the recommended range of 15 to 48 inches (380 to 1,220 mm) above the ground, which will allow preferred forward reach. Devices such as tongs should be made available to people with a limited reach. This will allow most people access to all products. For recommended reach ranges, see the chapter, "Basic Human Dimension Data," beginning on page 42.

The design standards pertaining to entrance ways, parking, rest rooms and other building elements explained elsewhere in this book also apply to business establishments.

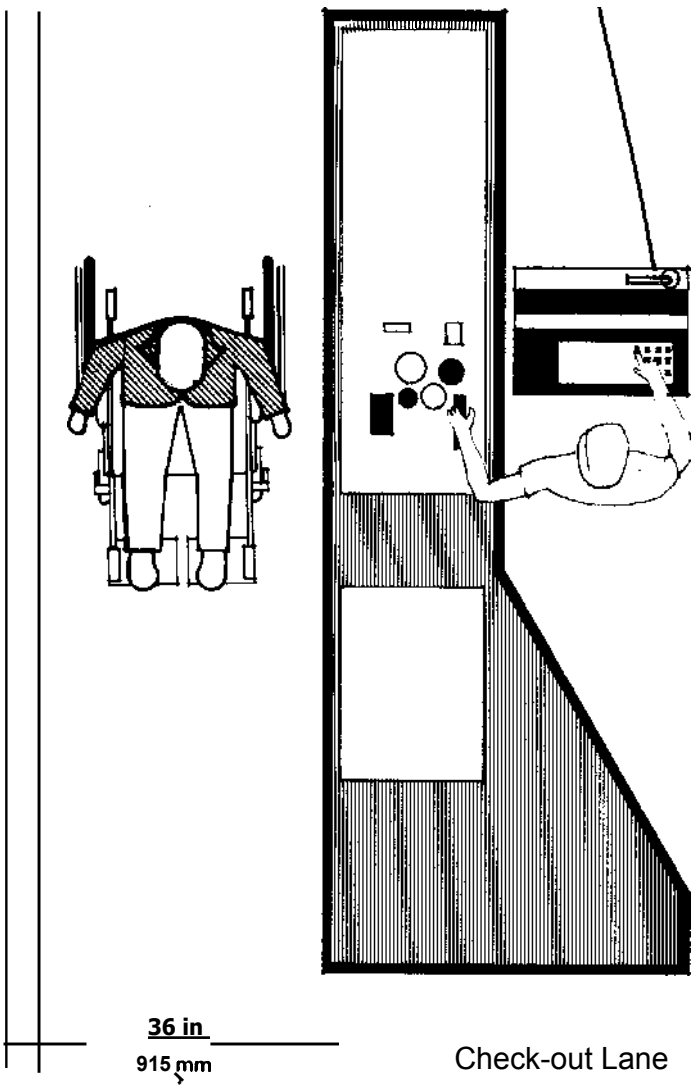

Check-out Lane

Recreation

Access to recreation facilities for persons of all ages with disabilities can be accomplished in a variety of ways. Consideration of the following recommendations will provide a means of recreational and therapeutic enjoyment for all.

Play Areas

Child play areas should allow wide-ranging activities that provide both defined and creative experiences. Many children with disabilities are only able to achieve satisfying play by using defined apparatus. Others quickly lose interest in traditional play equipment but their attention may be held by creative apparatus.

Facilities should be safe, able to serve many individuals, and easily accessible from the adjacent community by means of hard surface paths with appropriate ramps, where necessary. These paths, which can double as tricycle paths, should continue into the playground, improving accessibility for people with mobility impairments.

The play area should be planned logically, allowing children who are blind to enter the playground and learn to locate equipment as they move about the area. Existing equipment may only need to be rearranged or modified to accommodate children with a greater diversity of disabilities. The potential for injuries can be reduced by the removal of sharp edges, splinters or poorly-designed details.

Supervision is necessary depending on what type of disability a child may have. Usually, this means parents should accompany their children and supervise their play. However, a single attendant may be sufficient.

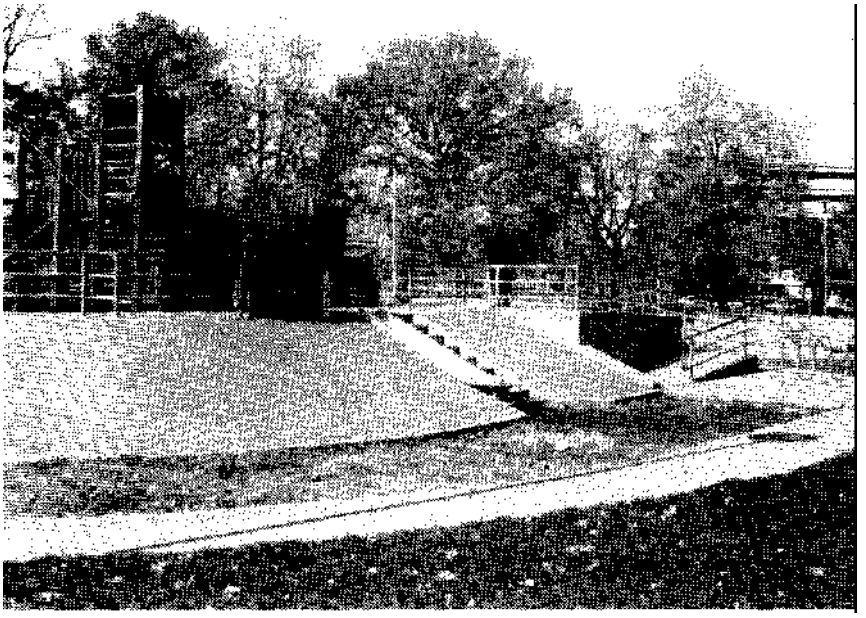

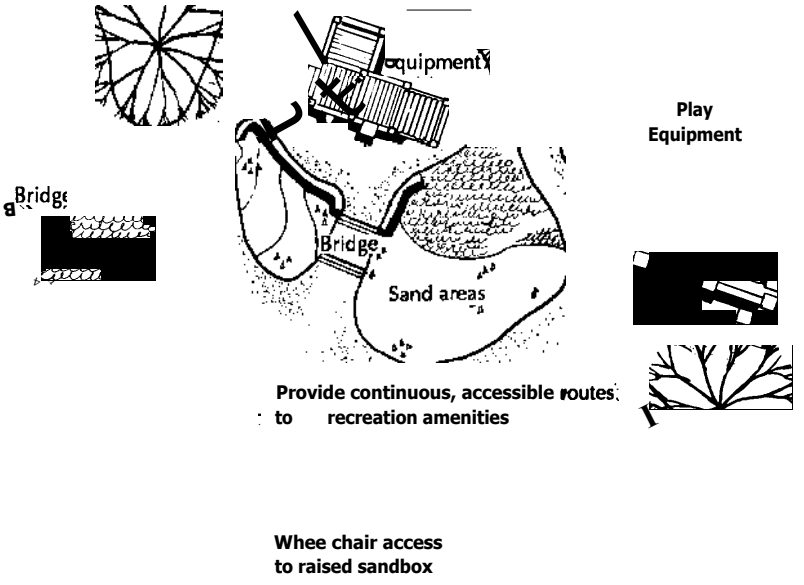

Accessible Playground

Camping Cooking and Picnicking

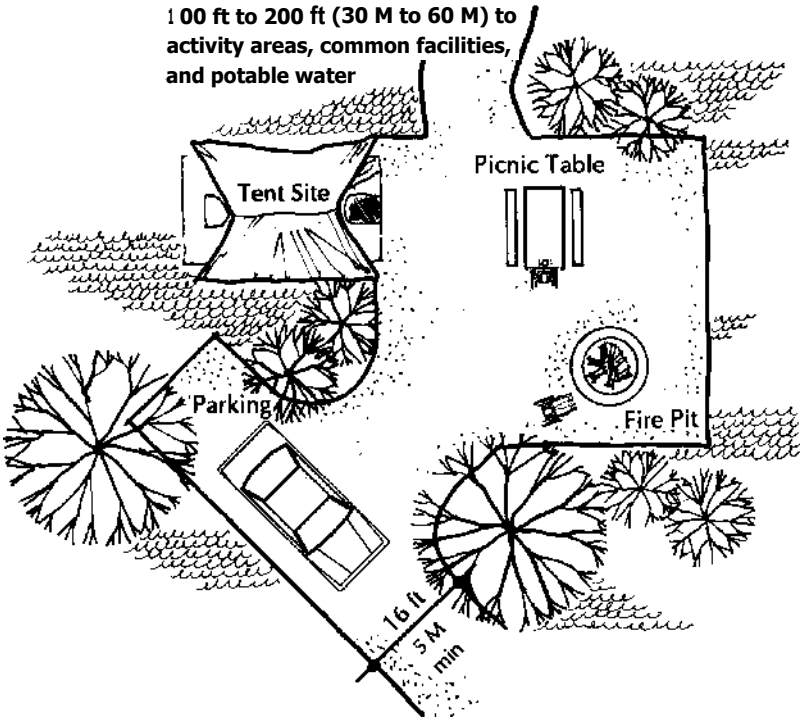

Access to campsites should be from hard surface paths which are free from dangerous obstructions such as tree branches. Vegetation should be pruned at least 102 inches (2,600 mm) from the ground. Accompanying rest room facilities, activity rooms, as well as water outlets, should be no further than 100 to 200 feet (30 to 60 M) from campsites. Water outlets located 40 inches (1,015 mm) from the ground, which may be turned on by a lever rather than a typical gate valve, are easily operable by most people. Positive drainage should carry away any associated water. Tables for picnicking and general activities should be set on a hard surface for easy accessibility. For more information on tables, see the section, "Outdoor Furniture," beginning on page 72.

A raised fireplace which is 18 to 24 inches (455 to 610 mm) above the ground is much easier to use from a seated position or wheelchair than a ground-level fireplace. However, if cooking food is a primary activity, a charcoal grill placed on a hard surface may be more convenient. The clearance from the ground to the top of the grill should be a maximum of 30 inches (760 mm). The grill should be capable of rotating and allow a person seated in a wheelchair to reach all sections. Racks for the placement of utensils or food should be attached to the grill.

Campsites should allow for varying degrees of challenge and seclusion.

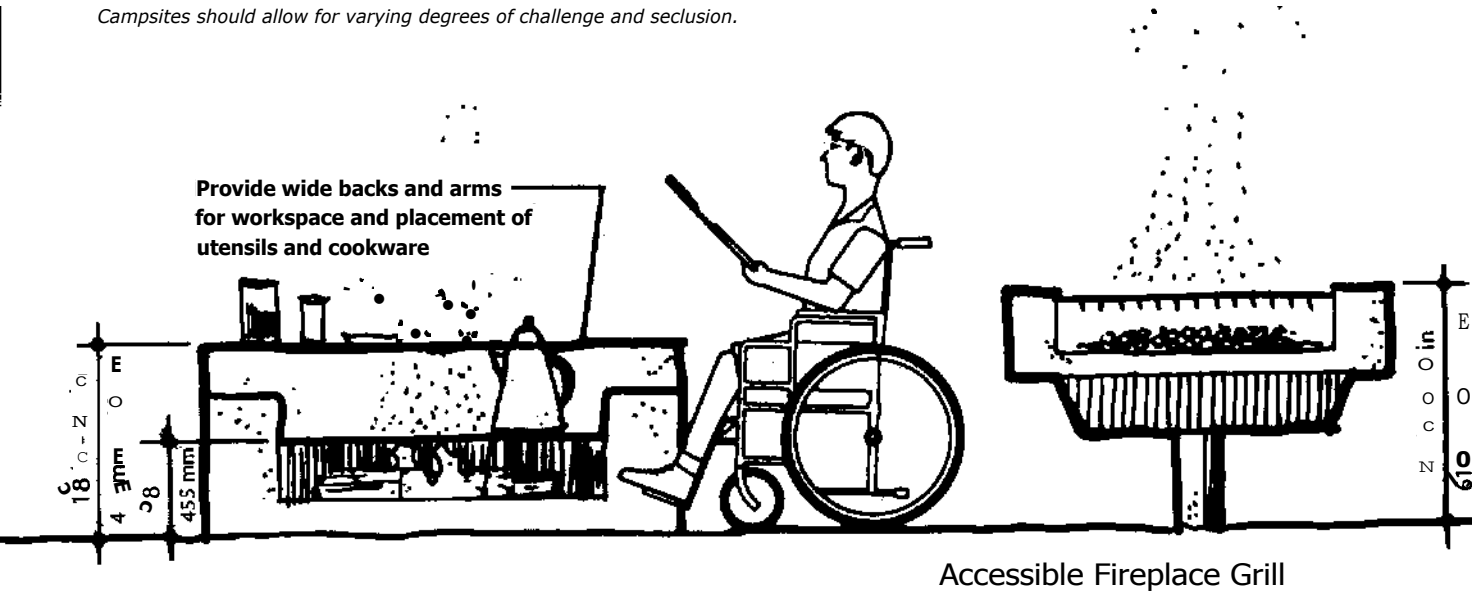

Accessible Fireplace Grill

Interpretive Trails

Trails should provide a pleasing and educational experience for a wide diversity of individuals. Their layout must consider organization and detail.

Signage that gives information on the trail length, location of special areas such as rest rooms and other comfort facilities, and points of interest should include both braille and raised characters as well as pictorial symbol signs. These informative signs, placed both at the beginning and throughout the trails for viewing and touching, should also include signals for textural changes or dangerous areas. Also see "Site Signage" on page 56 and "Interior Signage" on page 123 for further signage details.

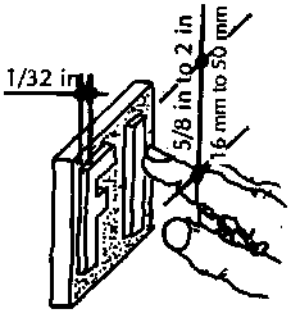

Recreational Signage

Other tactile guides could include a line or rope extended 36 inches (915 mm) above the ground along one side of a trail, and along both sides where sharp turns must be negotiated. Knots at appropriate segments may be used to indicate the location of rest stops and rest rooms. Nylon rope is a preferred choice of material for the guideline since it is comprised of smooth fibers which are inoffensive to a grabbing hand. Nylon is also impervious to rot.

Tape recorded messages can enhance the trail experience for participants. Such an option may be provided by placing actuating buttons along the trail. Headsets which receive transmitted messages as the user comes into range may also be worn.

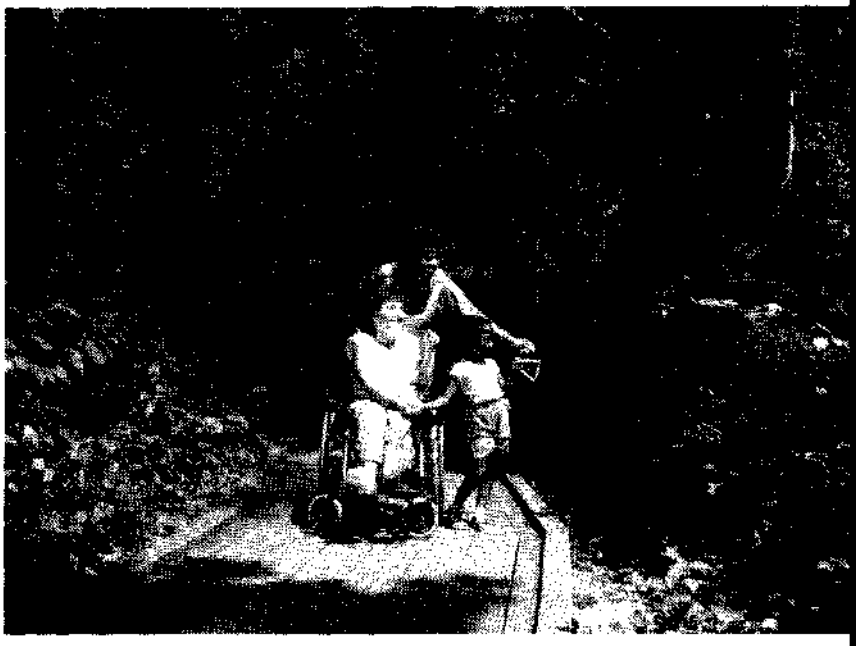

McGuire-Willis & Associates, Columbus, Ohio

Provide interpretation for people with hearing impairments through visual displays in the form of slides, interactive computers, or television monitors equipped with closed caption capabilities.

Trails should be constructed of materials such as asphalt, concrete or wooden planks, which provide a hard surface. Soft surface materials such as gravel or mulch may restrict mobility for people who use wheelchairs, canes or walkers.

Spectator Areas

Sideline participation in sporting events should be provided for all. Spectator areas should allow a choice of seating to accommodate people who use wheelchairs or other mechanical aids. Such areas should also include attendant ramps and stairs, where appropriate, be on a firm surface and be easily accessible (see the section, "Outdoor Ramps, Stairs and Handrails," beginning on page 61). Protection from inclement weather should be provided, but care should be taken that the protective areas do not reduce participants' field of vision. (For suggested seating specifications for people who use wheelchair/mechanical aids, see the earlier part of this section, "Areas of Assembly," beginning on page 163. For information on amphitheaters, see "Stadiums and Sports Arenas" on page 184.)

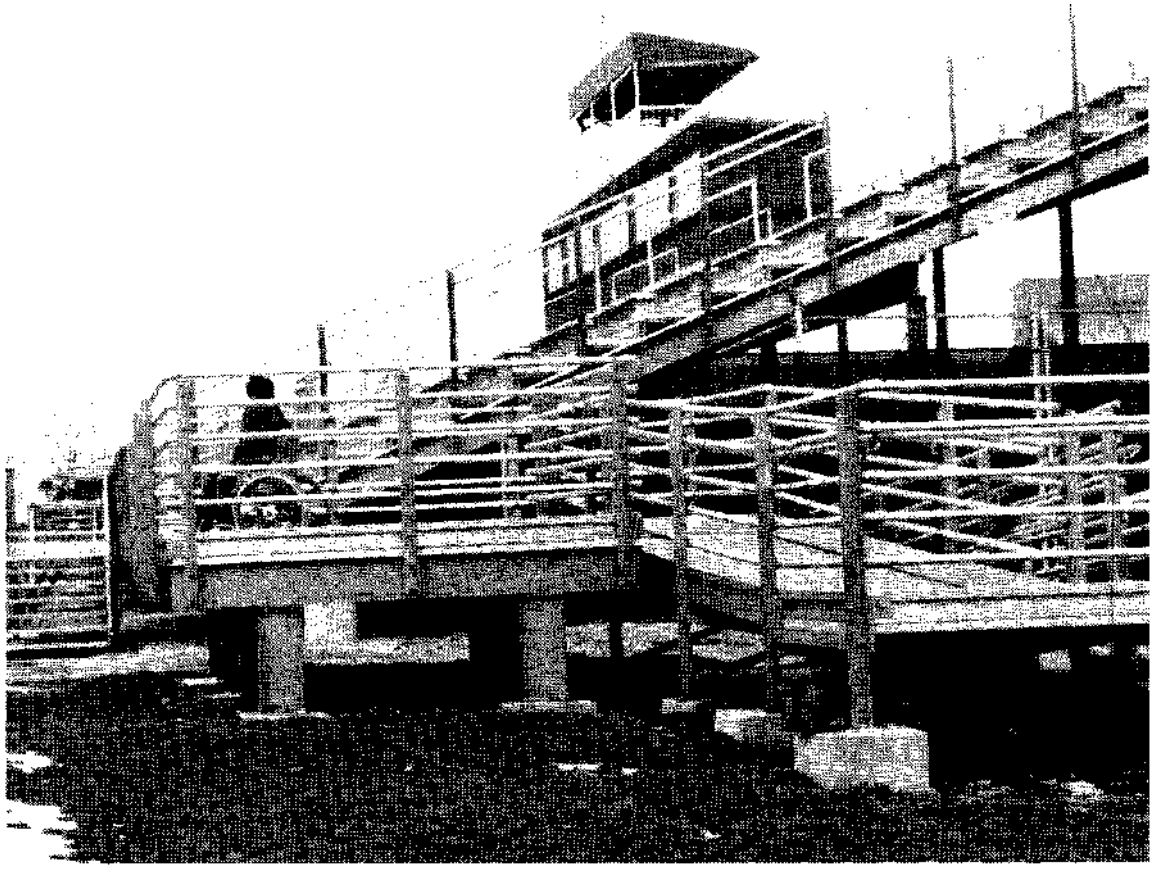

Accessible Viewing Stand

Sailing, Boating and Fishing

Water sports may be enjoyed by many people with disabilities, provided that special accommodations are made. Such adaptations should focus on providing access to boats and creative support mechanisms within the boats.

Access routes to docks should be provided over stabilized and clutter-free surfaces. Potential hazards such as traditional cleats, electric dock lines, gear carts or dock boxes should be eliminated.

Handrails and railings which allow people with physical limitations to support themselves while traveling along the docks and entering boats should be provided. (For information on railings, see the section, "Outdoor Ramps, Stairs and Handrails," beginning on page 61.)

Provision to board a boat safely from a parallel or perpendicular position to the dock should be made. Hand grasps or rails within the boat would assist the occupant to move from side to side or bow to stern.

Fishing may be made accessible for all by providing a stabilized surface to and along the water's edge. Other options which provide more intimacy with the water are fixed and floating piers which extend from the shore to accommodate fluctuations in water levels. Piers should have accompanying shelves or tables to accommodate fishing gear.

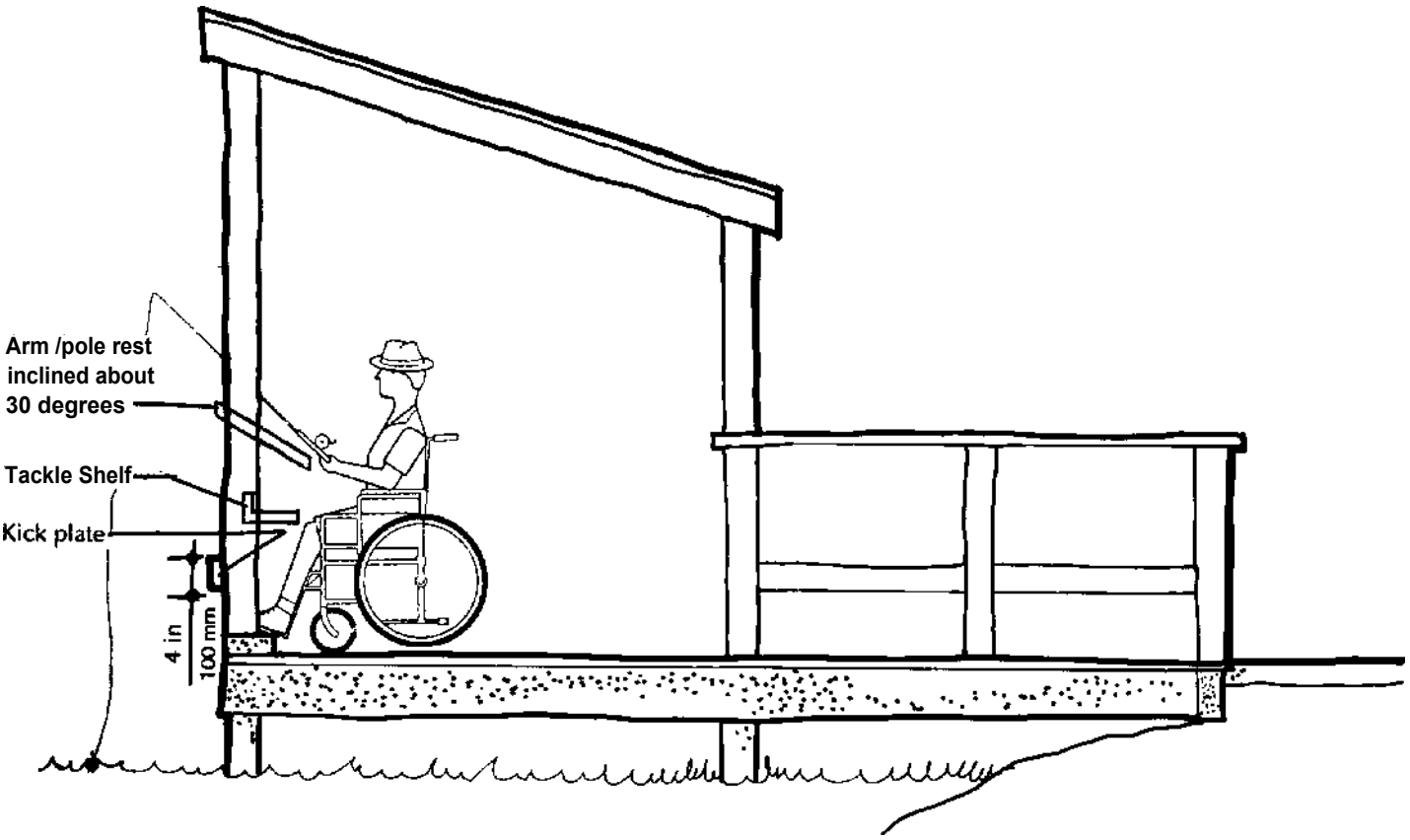

Accessible fishing piers should provide shade, space for gear and benches. The width of the pier should allow the free movement of pedestrians behind standing or seated fishermen. Provide a tackle shelf which is 8 to 2 inches (200 to 305 mm) wide and an arm/pole rest inclined about 30 degrees. Provide a 4-inch (100 mm) kickplate along the edge of the pier for safety. Spacing between the deck planks should be less than 1/2 inch (13 mm).

Swimming Pools

Swimming pools have the advantage of being more easily supervised than lakes or rivers. In addition, control of water depth, water temperature and water cleanliness may be maintained.

Emergency or attention-getting devices that can be activated by an attendant or lifeguard, including lights, sirens or flags, should be provided in the pool area for people with visual or hearing impairments. All paved surfaces in and around pools should be non-slip and non-abrasive.

Markings outside the pool and floats in the water should be used to indicate increasing water depth.

An underwater bench is useful for persons with disabilities, giving them a convenient place to rest while in the water. The bench must be located so that it will not cause accidents.

A lift for lowering people into the pool or a ramped pool entrance into shallow water is recommended. The ramp should have a maximum 8.33 per-cent gradient, a non-slip surface, and a curb on the drop-off edge. Handrails which are 34 to 38 inches (865 to 965 mm) high and located on both sides are essential.

All pool edges, including copings, scuppers, benches and steps should have rounded edges.

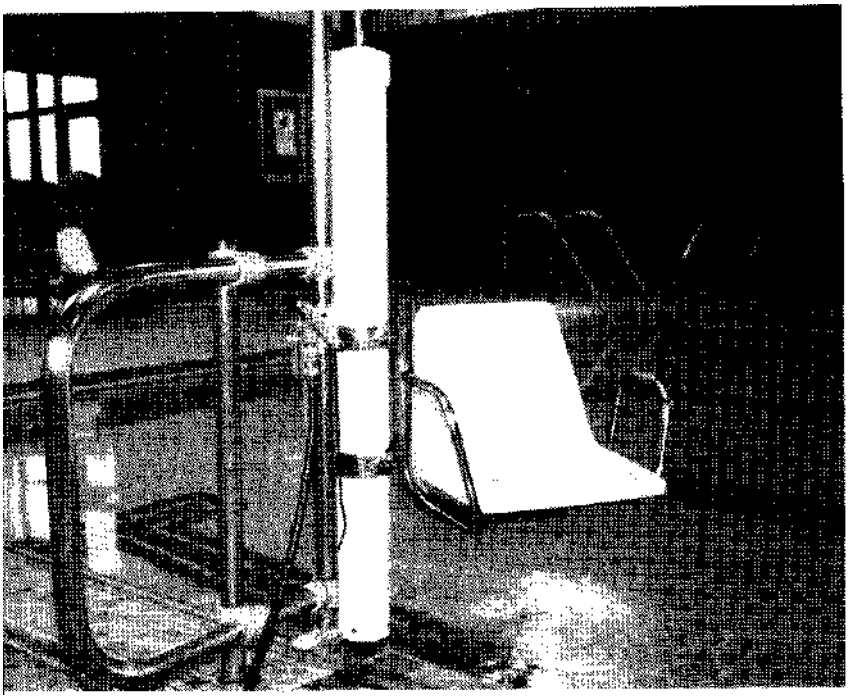

Courtesy of Winnie Walker, CCPD Advisory Committee member

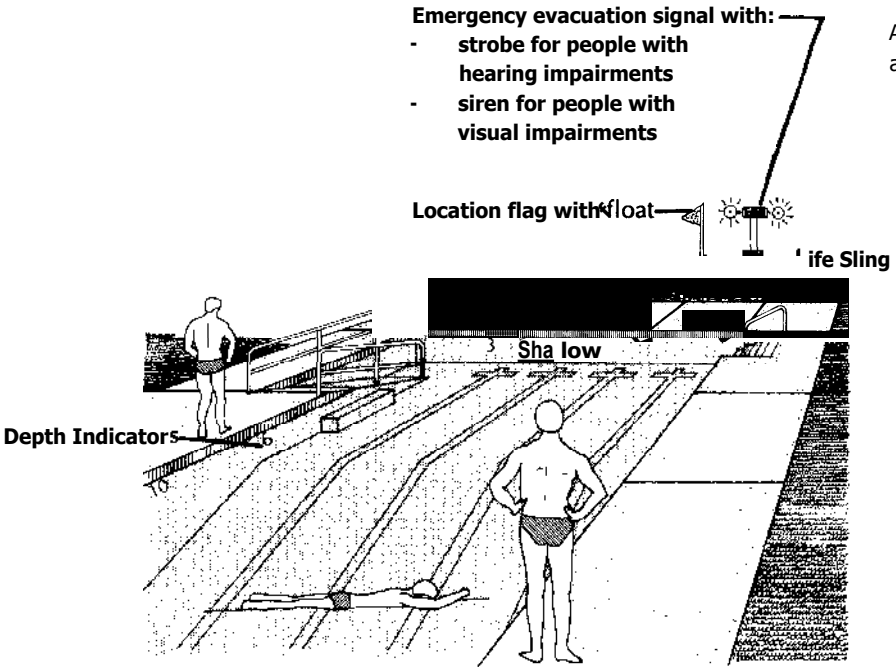

Accessible Swimming Pool

Lake Swimming

Swimming in lakes cannot be controlled as well as in swimming pools; but with a little effort, lakes can be made accessible for most people with disabilities.

People using wheelchairs and other mobility aids have difficulties in sand. If a paved walkway from the parking areas leads along the water's edge and provides an underwater ramp for beach swimming, accessibility will be greatly enhanced. This walkway as well as the swimming ramp should have handrails at 34 to 38 inches (865 to 965 mm), and a curb on the deep water side. Considering waves and tides, the maximum depth of this underwater walkway should be 30 to 36 inches (760 to 915 mm).

Supervised lakefront swimming areas should be clearly marked by ropes, floats, buoys or other visible, floating markers.

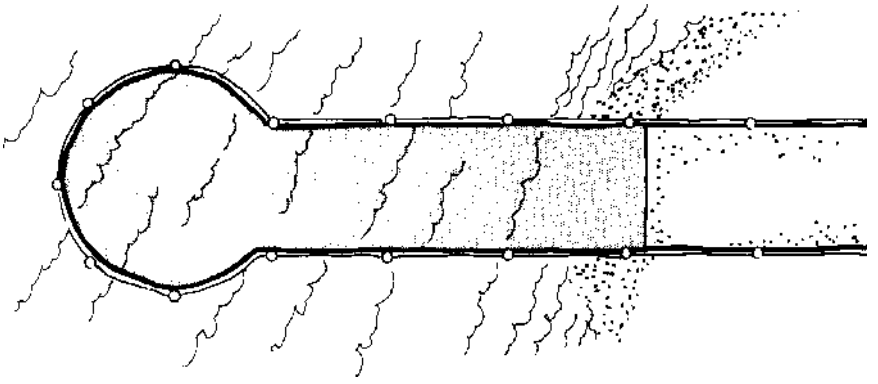

Provide a swimming ramp with a 10 foot (3 meter) diameter terminus for wheelchair maneuverability.

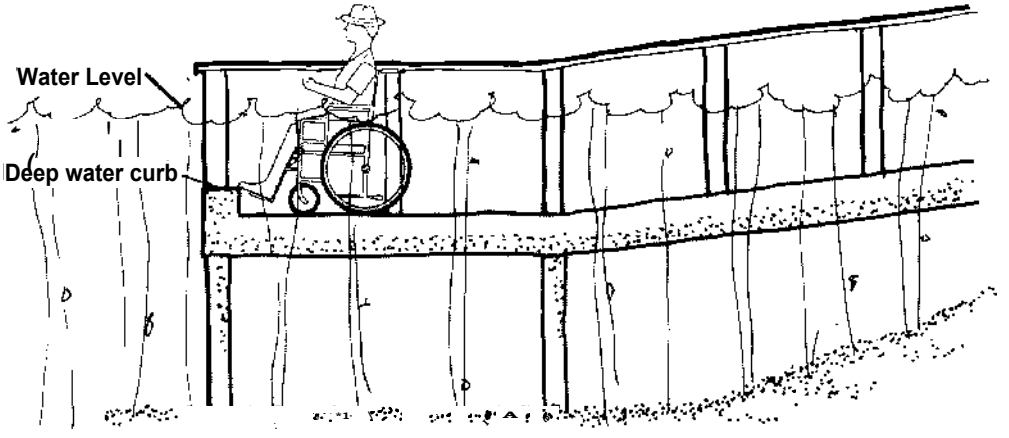

The length of a swimming ramp should be adjusted to the slope of the lake bed, or a 1:12 (8.33 percent) maximum gradient. Wave size should also be taken into consideration with the slope design.

Recreation Buildings

Buildings at recreational sites for group activities such as program lectures or courses should follow the recommendations found earlier in "Areas of Assembly," starting on page 163.

Transportation Facilities

The ADA, under Title II, requires newly-constructed transportation facilities for rapid, light rail or commuter rail facilities to be accessible for individuals with disabilities. Existing key or major stations must also be accessible. For instance, rail stations such as those now operated by Amtrak must also be accessible within a prescribed time frame.

Pedestrian circulation paths, service paths, service and access at airports, bus stations, subway stations and train depots should be studied in depth. The greatest problems for people with mobility impairments are caused by the dynamic, movement-oriented barriers which are characteristic of present transportation systems: acceleration, crowds, time pressure and sudden stops."

Barrier-free architectural design dealing especially with crowd movement and control can go a long way toward providing convenient and comfortable access to public transportation systems for all persons. Waiting areas should contain seating which is either fixed or heavy enough to avoid sliding. Sufficient open space should be provided to accommodate persons in wheelchairs. Waiting areas that are not directly situated in major circulation paths are suggested. See the chapters "Architectural Design Features" and "Site Design Features" on pages 78 and 50 respectively for more information on barrier-free design.

Where pedestrian control devices are necessary, power-operated gates with a minimum clear opening width of 32 inches (815 mm) — but wider when possible — are highly recommended in lieu of turnstiles or other inaccessible gate devices. Where turnstiles must be used, at least one power-operated gate or alternate accessible entrance should be provided.

Fare deposit coin slots should be designed for use by persons with gloves, poor muscle control or artificial limbs. This will help maintain a steady flow of pedestrian traffic.

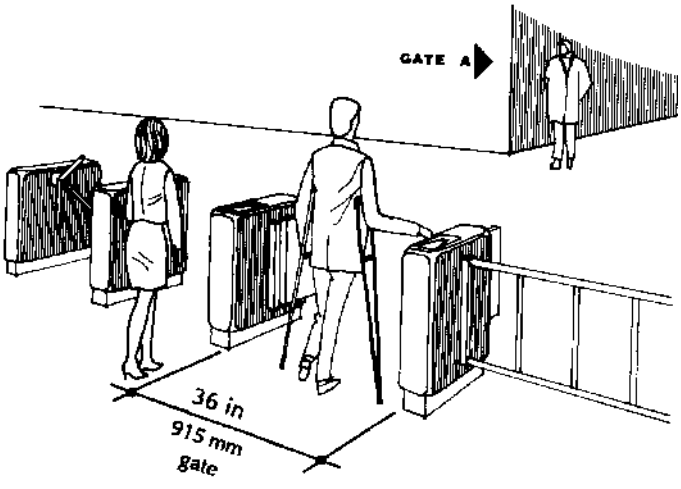

Power Operated Gate

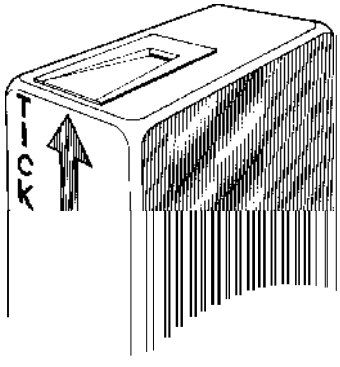

Fare Deposit Box

Transportation Vehicles

In general, Title II of the ADA requires all new fixed-route public transportation vehicles such as buses and rail vehicles to be accessible. Vehicles currently in use may remain so without remodeling to meet the requirements placed on the new vehicles.

Trains are required to be accessible under formulas for different kinds of cars. However, one car per train in existing commuter rail, light rail and rapid rail systems is required to be accessible.

Other transit service comparable in scope to fixed route bus or rail service is required for persons with disabilities who cannot use this service.

Both large and small private inter-city transportation providers are required to provide accessible new buses. Charter and tour services are required to provide access only on new vehicles. Under Title III, demand-response systems such as taxi services are required to accommodate passengers with disabilities.

Courtesy of Central Ohio Transit Authority

Courtesy of Amtrak

Offices and Other Places of Employment

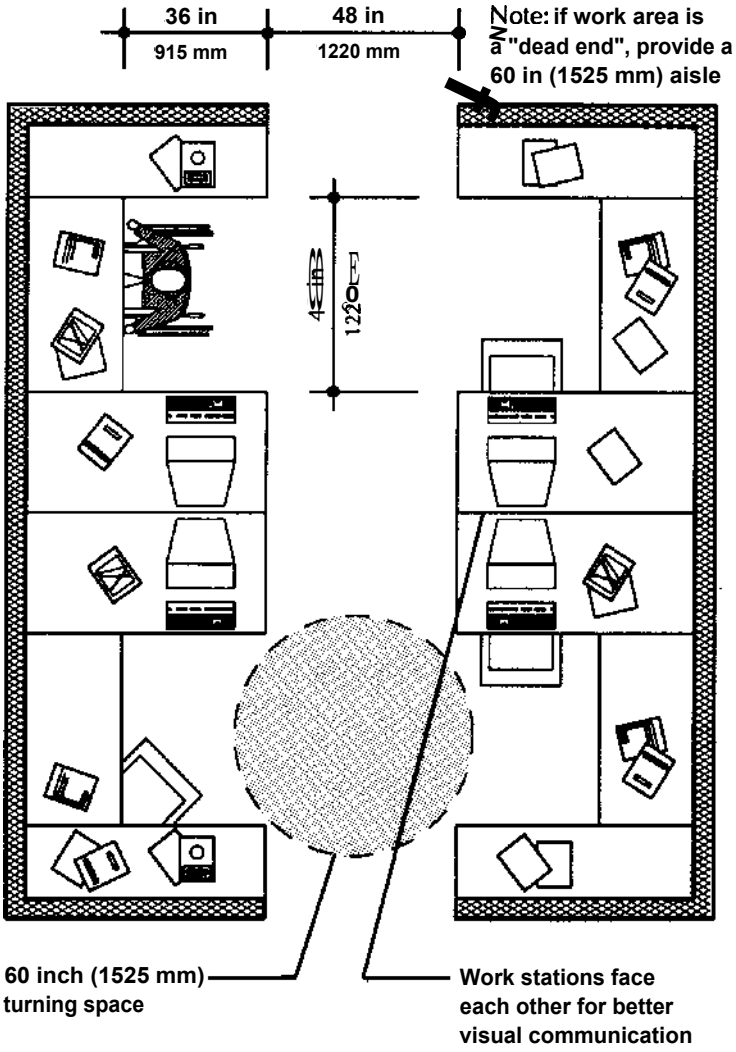

Accessible Office

Professional offices are considered public accommodations under the ADA category of service establishments. The only examples which are given are the offices of accountants, lawyers, insurance agents or health-care providers. However, this should not be taken to mean that these are the only types of offices which would be considered places of public accommodation. Technically, any office which provides a service has potential to be called a public accommodation. Under Title **III** of ADA, the public areas of such offices, *i.e.,* the lobby, reception area and conference rooms, must meet all of ADA's architectural guidelines. Areas which are used by employees only as work areas are required to be accessible enough to allow people with disabilities to approach, enter and exit the area. These areas are not required to comply with all of the architectural guidelines.

However, under Title **I,** employers are prohibited from discriminating against people with disabilities as current or potential employees. Employers are required to make reasonable accommodations to allow a person with a disability to perform the duties of a position for which he or she is qualified. Reasonable accommodations can include administrative changes such as flexible schedules and equipment modification. Work site modifications for people with disabilities is a complex subject which is beyond the scope of this book. However, these modifications will be in vain if the building, office or rest rooms are inaccessible.

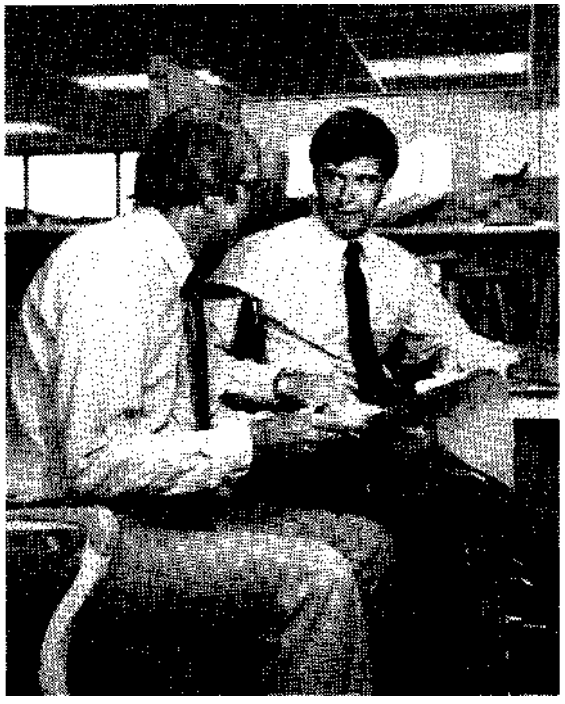

McGuire-Willis & Associates, Columbus, Ohio

An accessible office is a critical factor in guaranteeing employment opportunities for people with disabilities.

It is recommended that all offices and office buildings be accessible for two basic reasons. First, the opportunity for employment must be available for all persons. Second, a business which is considered a public accommodation could possibly become a tenant of an office building at any time; it would be less costly for the building owner to construct a barrier-free building at the onset, than to modify an inaccessible building for tenants whose offices are required to be accessible.

Newly constructed or renovated office buildings must comply with the ADA accessibility guidelines. All fixed spaces such as private offices, conference rooms and rest rooms must be barrier-free. In open office areas, enough space should be allocated to allow all common areas and a significant number of work stations to be accessible in the future, even if not arranged that way at initial occupancy.

Beyond meeting the criteria for site accessibility found in the chapter, "Site Design Features," beginning on page 50, and for building accessibility, as found in the chapter, "Architectural Design Features," beginning on page 78, there are several special items to consider in the design and planning of offices. The suggestions which follow are by no means comprehensive, but provide some general guidelines and specific examples as a starting point in making an office accessible.

People who use wheelchairs or other mobility aids benefit from increased maneuvering space in and around work stations. Adjustable desks, tables or workstations benefit everyone. If these are not feasible, it is recommended that a minimum knee clearance of 30 inches (760 mm) from the floor be provided at all work surfaces. Accessible work stations should be located so that travel distance to supply storage rooms, rest rooms and other common areas is reduced.

All workers, especially those with hearing or cognitive impairments, benefit from rooms and work stations with acoustical treatment which reduces confusing background noise. Visually busy or confusing background wall coverings can distract people who communicate in American Sign Language or through lip reading, and should be avoided. People who communicate visually can also benefit from face-to-face seating arrangements as well as visual screens for private conversations. Open areas with neutral backgrounds should be provided for visual group communications.

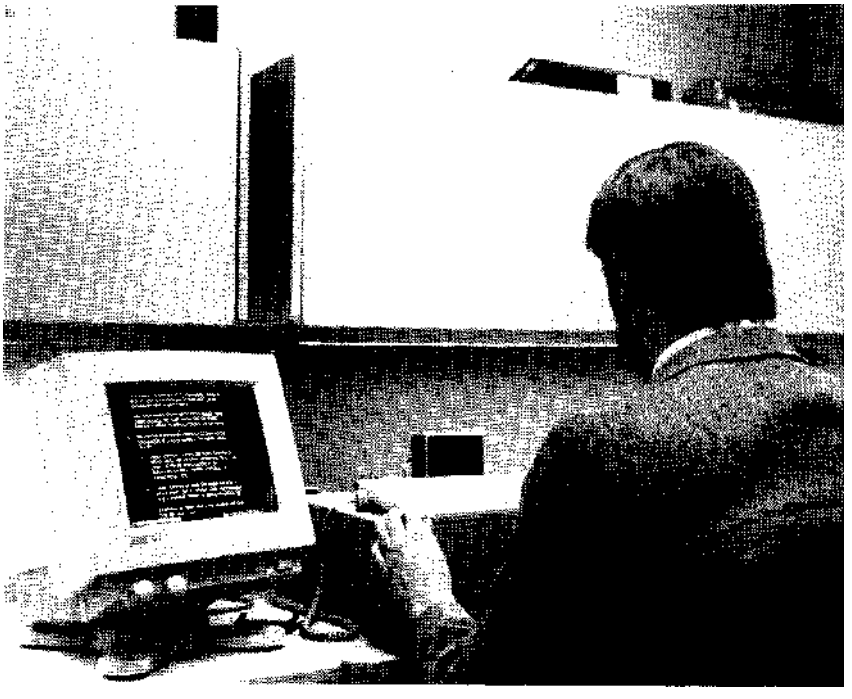

This employee is using a computer with voice output. The use of such equipment depends on acoustical treatment of the work space to reduce background noise.

People with visual impairments benefit when changes in the texture and surface acoustics at certain locations give location cues and signal that another person is approaching. For example, when a carpeted surface suddenly changes to a tile floor at the intersection of major paths, a person who is blind is alerted to the possible approach of others. A logical organization of spaces into departments and related functions facilitates the creation of a "mental map" which increases safety and comfort for people with visual or cognitive impairments. All employees, but especially those with visual impairments, will benefit from adequate lighting which does not produce glare on computer screens and other reflective surfaces.

Other Places of Employment

As mentioned earlier, areas of public accommodation used by employees as work areas are only required to be accessible enough to allow people with disabilities to approach, enter and exit. It is strongly recommended, however, that all places of employment be made as accessible as possible. A work place must be accessible in order for people with disabilities to have the opportunity to work there. If a potential employee cannot enter the front door, then the applicant cannot even interview for the position. Similarly, if the work place does not have an accessible rest room, then a person with a disability cannot work there, since no one can realistically be expected to work a full day without using the bathroom. An architectural barrier to a place of employment can be as serious a violation of civil rights as a refusal to hire a qualified applicant who is disabled.

The design of some work places, such as restaurant kitchens or factories, is highly complex even without considering accessibility issues. The services of qualified facilities designers, rehabilitation engineers or work place modification consultants will be extremely important in ensuring that facilities are accessible. For most places of employment, accessible design should begin with the general building guidelines provided in the chapter "Architectural Design Features," beginning on page 78; from there, specialists can be consulted as necessary.

ENDNOTES

1. Americans With Disabilities Act, Subpart B, Sections 36.202 and 36.203, page 35595.
2. James Muller, *Accommodating the Disabled Student* (Washington: The George Washington University, February 1981), page 75.
3. Department of Justice, Office of the Attorney General. *Federal Register,* Nondiscrimination on the Basis of Disability by Public Accommodations and in Commercial Facilities; Final Rule, Vol 56, No. 144 (Washington, DC: July 26, 1991), page 35593.
4. Dimensional Data for children with disabilities was obtained from two basic sources:

   Architectural Graphic Standards, American Institute of Architects, John Ray Hoke, Jr., AIA, editor (New York: John Wiley & Sons, 1988), page 8.

   Human Dimension and Interior Space, Julius Panero, AIA, ASID and Martin Zelnik, AIA, ASID (New York: Whitney Library of Design, 1979), pages 106-10.
5. Thomas D. Davies, Jr., AIA and Kim A. Beasley, AIA, *Design for Hospitality - Planning for Accessible Hotels and Motels* (New York: Nichols Publishing, 1988), page 122.
6. The requirement for closed caption decoders is found under Subpart C, Section 36.303(e) Auxiliary Aids and Services on page 35597 of the July 26, 1991, *Federal Register.*
7. Davies, op. cit., page 71.
8. See endnote 6.
9. The requirement for a lowered section of counter at a hotel/motel registration desk is found under Section 7.2 on page 611 of the ADAAG. Alternatives to the lowered section are also outlined in this section.
10. More information on interactive menu boards can be obtained from Touch Choice, Inc., Dale W. Beavers, president, The Artglow Company, Columbus, Ohio, 614/475-2300.
11. U.S. Department of Transportation, Office of the Secretary. *Travel Barriers* (Washington, DC: 1970), page 46.

Renovation and Rehabilitation

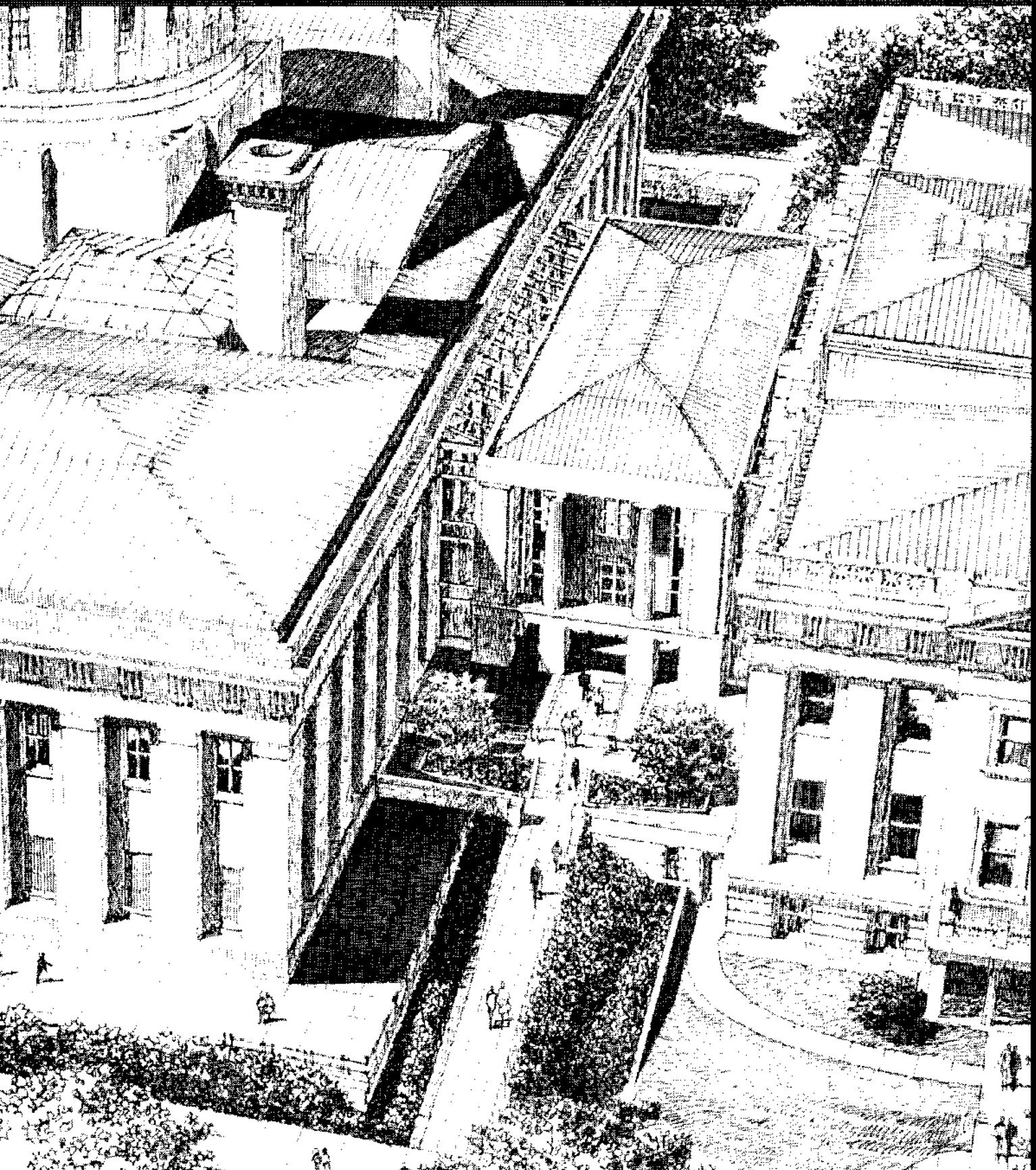

Renovation and Rehabilitation

Prior to the passage of the Americans with Disabilities Act (ADA), there were few regulations which required existing buildings to be made accessible to people with disabilities if no alterations to the building were planned. Now, however, failure to take readily-achievable steps to remove barriers in existing buildings could result in costly civil rights litigation.

"Readily-achievable" barrier removal is defined as that which is "easily accomplishable and able to be carried out without much difficulty or expense."' The legislation provides a list of examples which includes non-structural modifications such as repositioning shelves or rearranging displays as well as structural changes such as widening doors and installing ramps.' The intention is that what is readily achievable will be determined on a case-by-case basis.

ADA also requires that any alteration to an existing building be made so that the altered area is accessible: This requirement includes rest rooms, telephones and drinking fountains serving that area, as well as the path of travel to the altered area. If the cost of making the path of travel accessible exceeds 20 percent of the cost of the alteration, then the path must be made as accessible as possible within that 20 percent expenditure.

Although the legislation does not explicitly define a level of compliance for existing buildings, it does require that existing facilities which are within the scope of ADA must at least formulate and follow a plan for making their facilities accessible. The Justice Department recommends the development of a barrier removal plan which, if appropriately designed and diligently executed, could serve as evidence of a good faith effort to comply with ADA's barrier removal provisions.'

ADA allows some flexibility in meeting barrier removal requirements as well as requirements for the accessibility of alterations. In many cases, existing buildings can be modified for full accessibility. The ideal goal should always be barrier-free access throughout a building. Design criteria for barrier-free construction as explained throughout this publication should be applied to renovation, rehabilitation and site improvement projects, and modified as required by the unique characteristics of each project.

Achieving the goal of maximum feasible accessibility in the existing buildings may require structural changes. This chapter is an attempt to provide guidelines for surveying existing buildings for areas of non-compliance with ADA, analyzing the results in terms of priority, and designing and implementing required changes.

Remodeling and renovation is a highly individual undertaking which is dependent upon many variables. The age and site of the existing structure, building use and the number of occupants are just some of the factors which must be taken into consideration. The modification of some buildings for accessibility will be a challenge; creative design solutions are essential to the ultimate goal of a barrier-free environment.

Procedures for Renovation and Rehabilitation

The procedure for converting an existing facility to one which is barrier-free involves four basic steps:

1) Survey of existing facilities
2) Analysis of survey results
3) Design/estimate
4) **Implementation**

This chapter follows these steps in a logical manner, and illustrates some common architectural details which can be used when making accessibility renovations. It is recommended that building owners and managers undertake structural modifications to a building ***only*** with the advice and counsel of a qualified architect.

STEP 1. Survey of Existing Facilities

The first step in any renovation process involves an on-site survey of existing facilities. The survey can take many forms, but use of a comprehensive accessibility checklist may often be the simplest approach. An excellent checklist specifically geared to ADA compliance is available from the Building Owners and Managers Association (BOMA).[4]

The BOMA or any other checklist is intended as a starting point for designers involved in building modifications. These checklists will not be able to cover every unique situation which may be encountered in an existing building, but will be valuable when used in conjunction with the recommendations in this book.

Another method which has been suggested for surveying an existing building is to borrow a wheelchair or enlist the assistance of someone who uses a wheelchair and "try out" the building. People with other types of disabilities, such as visual or hearing impairments, should also be consulted to identify all types of barriers. This type of survey will not be as thorough as one performed with a comprehensive checklist, but it will quickly identify major problem areas.

Regardless of the method or checklist used, a comprehensive survey must be obtained. It does no good, for instance, to modify a rest room for accessibility while not removing barriers at the parking areas and building entrances. Once again, common sense dictates the approach and solution.

STEP 2. Analysis of Survey Results

Once all existing barriers have been identified, plans can be made for barrier removal. An important part of creating a barrier removal plan is to determine which barriers can be removed with minimal cost and reasonable effort. The determination of what is "readily achievable" will have to be done on a case-by-case basis.

The nature and cost for removal of each barrier should be weighed against the financial resources of the public accommodation as well as the number of people who would benefit from the barrier removal. The decision to remove or not remove barriers should be made thoughtfully, and should be carefully documented, as these decisions will be subject to scrutiny in the event of a complaint.[5]

The most important concept to remember is that the purpose of ADA regulations is to prevent discrimination through the failure to provide equivalent access to goods and services for people with disabilities.

ADA provides a list of priorities which should be considered when creating a plan for barrier removal. These priorities are not mandatory, but are suggested to help determine which type of barriers should be removed first.[6] While the sequence of accessibility modifications must be adapted for each individual situation, the following list of priorities, which is based on those recommended by ADA, is suggested as a starting point:

<u>Priority 1: Building Access And Site Consideration</u>

A building cannot be considered barrier-free if people cannot park, negotiate the site, and use the entrance into the public spaces of the building. Barriers to access from public sidewalks, parking or public transportation should be among the first to be removed.

Priority 2: Movement To And Use of Primary Use Facilities

Once inside the building, all users should have access to the building's primary functional areas—those facilities they have come to the building to use. Barriers which prevent access to areas where goods and services are made available to the public should be the next to be removed.

For example: in a school building, primary use facilities include (but are not limited to) classrooms, laboratories, library rooms, offices and studios. Access to the applicable rooms, movement within them, and full participation in all group and individual activities are included in this category.

Primary use facilities may also include problems of vertical accessibility, since primary use may occur on multiple levels. Properly-designed interior stairways, ramps, handrails and elevators may require accessibility modifications.

Priority 3: Rest Room Facilities

Barriers which prevent access to rest room facilities should be the next to be removed.

A public accommodation and all of its primary use areas may be completely accessible, but if barriers to rest room use remain, the length of time which a person can spend in the building is limited.

Priority 4: Access To as Many Other Areas of the Building as Possible

This is especially important in areas which may be used by employees with disabilities. Denying reasonable accommodation for job performance is a violation of civil rights.

This last priority includes providing access to the actual goods and services available, not just access to the areas where they are available. For example, it is crucial that the books in an accessible library are reachable, the goods in an accessible showroom are conveniently located for a person with disabilities, or some alternate means of retrieval is provided.

The key to providing maximum accessibility in existing facilities lies in careful analysis of both the physical plant and the existing programs. Careful modifications to both will help overcome restrictive architectural barriers. If the removal of certain barriers is not readily achievable, ADA requires that the goods and services be made available through alternative methods. These alternatives may involve program modifications such as curb service, home delivery or relocation of activities. Alternatives to barrier removal can be an important part of an ADA compliance plan, especially when financial resources are small.

STEP 3. Design/Estimate

After the accessibility survey has been completed, the results have been analyzed and modification priorities have been established, actual design work can begin.

Regardless of the complexity of the particular design problems involved, creative design solutions will be required. Each building will have unique problems that must be overcome to ensure complete accessibility. Designs should emphasize usability by all people. Simple, inexpensive solutions can often provide a tremendous amount of accessibility.

During the design phase, a construction estimate should be prepared to ensure that adequate funding is available for the proposed modifications. Cost estimates are a valuable tool in determining which barrier removals are readily achievable, and can be extremely important in justifying such decisions. Estimates may also be used in the preparation of grant requests for architectural accessibility modifications. Funding sources may include public and private agencies, foundations and advocacy organizations.

STEP 4. Implementation

Implementation is the reality of accessibility modifications. It is through this step that an inaccessible facility is made barrier-free.

Upon completion of construction documents and assurance of adequate funding, the physical modifications job can be bid and a construction contract awarded.

Accessibility Modifications

Site and Parking Requirements

The primary goal of site accessibility modifications is to enable individuals with disabilities to arrive, park an automobile or be dropped off, and approach buildings or other facilities independently.

At least one accessible route should be created from public streets and sidewalks, public transportation stops, accessible parking areas and passenger loading zones to every building and to all site facilities. Guidelines for accessible routes may be found in the chapter, "Site Design Features," beginning on page 50.

To make existing parking facilities accessible to individuals with physical disabilities, parking spaces which are 96 inches (2,440 mm) wide with an adjacent access aisle of 60 inches (1,525 mm), for a total width of 156 inches (3,965 mm), must be provided.

In existing parking facilities, it may be most advantageous to make one accessible parking space from two existing spaces.

An alternate solution would be to make two accessible parking spaces from three existing spaces, using the center space as the adjacent access aisle.

Accessible parking spaces should be located as close as possible to accessible building entrances, preferably within 200 feet (61 M). The travel route between these parking spaces and building entrances should be direct and not cross vehicular circulation paths.

A drop-off area or passenger loading zone within 100 feet (30 M) of the accessible entrance is also recommended. Such zones should provide an access aisle at least 60 inches (1,525 mm) wide by 240 inches (6,110 mm) long which is adjacent to and parallel with the vehicle pull-up space. If there is a curb between the access aisle and the pull-up space, a curb ramp should be provided.

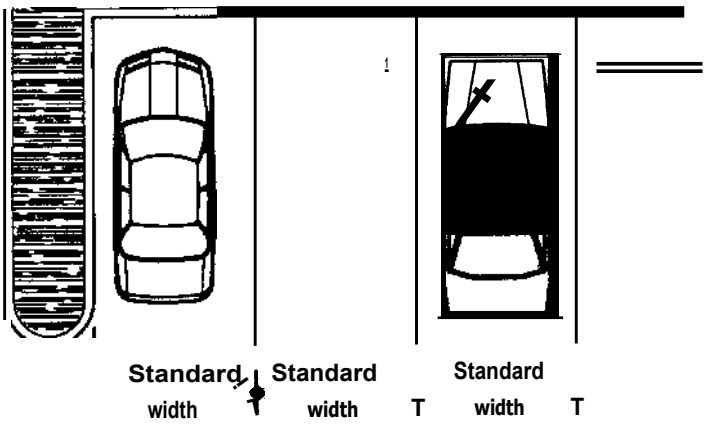

Existing Parking Spaces

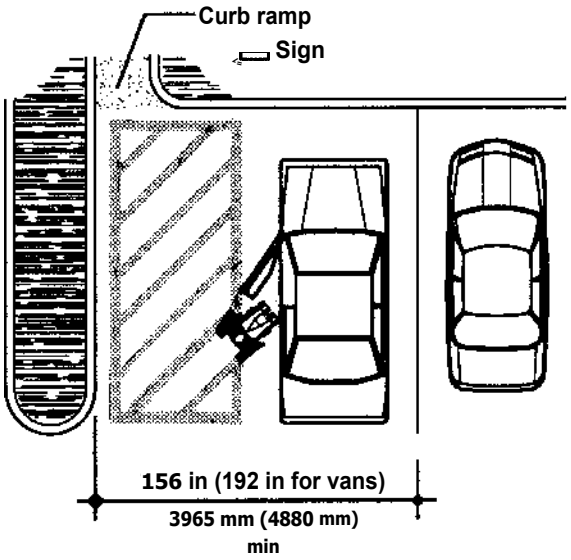

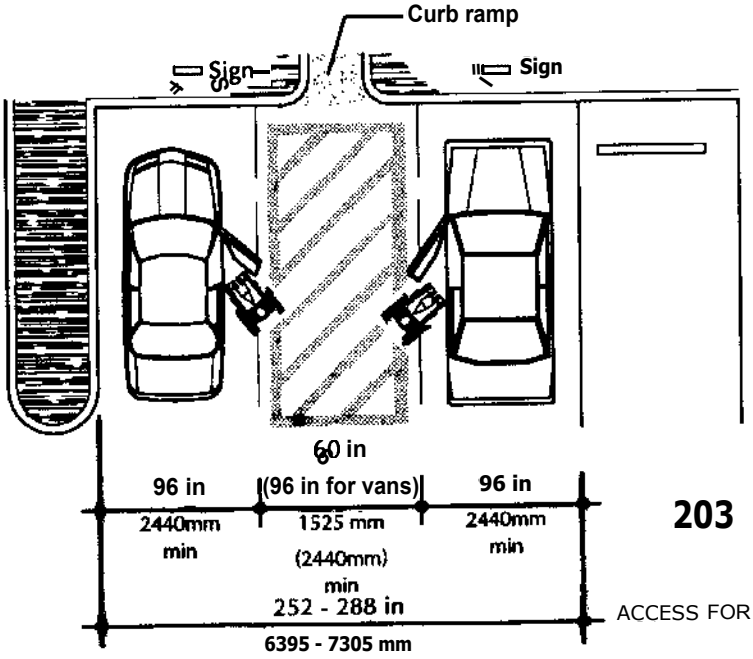

Accessible Parking Modifications

Entrances

Every existing building should be modified to include at least one accessible entry, preferably the same entry which is used as a main entrance by people without disabilities.'

All primary public entrances and as many employee and service entrances as possible should be made accessible. In some existing structures, it may be difficult to determine which entrances are considered "main" because actual usage patterns may vary from the intended building organization. The fol lowing criteria may be helpful in determining which entrances should be made accessible:

1) When given directions to the building, one would be directed toward that entry.
2) The entry provides the most direct access to main corridors, elevators and major public function spaces.
3) The entry is used by people as they approach from visitor or staff parking areas [8]

A survey of the main building entrance should include all existing exterior elements such as ramps, steps and doors which allow a person to travel from outside the building to just inside the doors, and should include any vestibule to a main corridor or lobby. These elements should be surveyed for conformance to the appropriate standards, and recommendations should be made for modifications, if necessary.

Many existing buildings have a main entry level which is above or below the existing ground level or "grade" outside the building. In such cases, an accessible transition must be created between these different levels. Sloping a walkway toward an entrance or installing a ramp is a common way of providing access to an entry which is not at grade level. Specific information on walkways, curb ramps, outdoor ramps, stairs and handrails is provided in various sections of "Site Design Features," beginning on page 50.

Where the difference between the outside ground level and the building entry level is minimal, regrading at the entrance to create an accessible walkway may be the least costly solution. Where an existing entry has stairs, the steps must be supplemented with a walkway.

A ramp will be required where the vertical distance between the interior floor level and the outside grade will not allow a walkway. Stairs at an existing entry should be removed only if there is not room for both a stairs and a ramp.

In some existing buildings, the traditional main entry and public spaces are on an upper level, but use patterns have changed, and a ground- or basement-level entry is used more frequently by all people. This happens particularly when the lower level entry is closer to the parking area or has easier access to an interior elevator. In such cases, creating an accessible entry at the lower level may be more appropriate and economical than modifying the upper level entry.

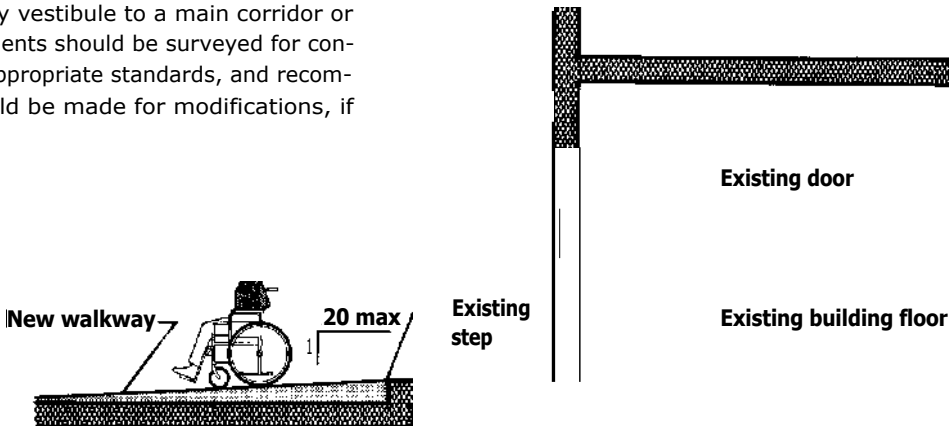

Elimination of Step at Building Entrance by Sloped Walkway

Where the vestibule is lower than the interior floor level, entry modification for accessibility presents special design problems. This is especially true when the existing steps to the main level are located close to the entrance, restricting adequate space for an interior ramp. Such an entrance could be made accessible by extending the floor level to the exterior building wall, where a new platform and ramp could be installed on the building exterior. It is important to note that in this situation the existing entrance door must be raised to floor level. This is possible only when there is sufficient ceiling height and no structural, mechanical or other obstructions above the door.

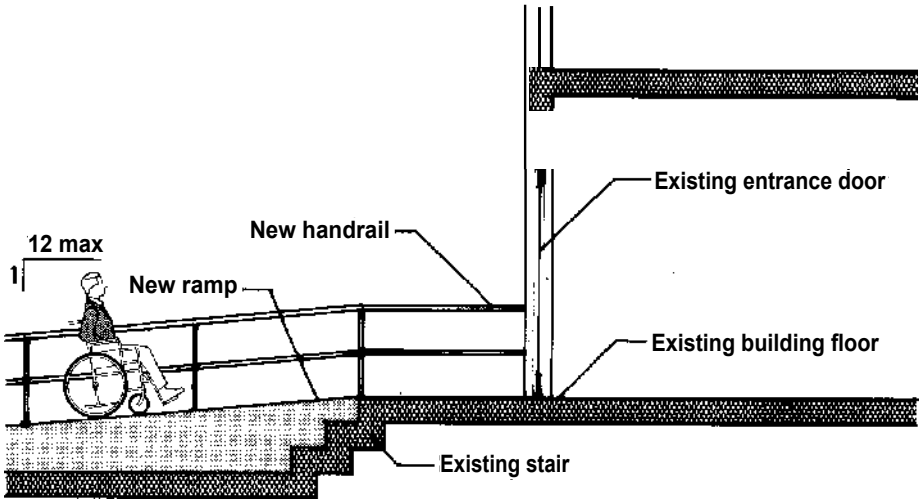

Elimination of Stair at Building Entrance by Exterior Ramp

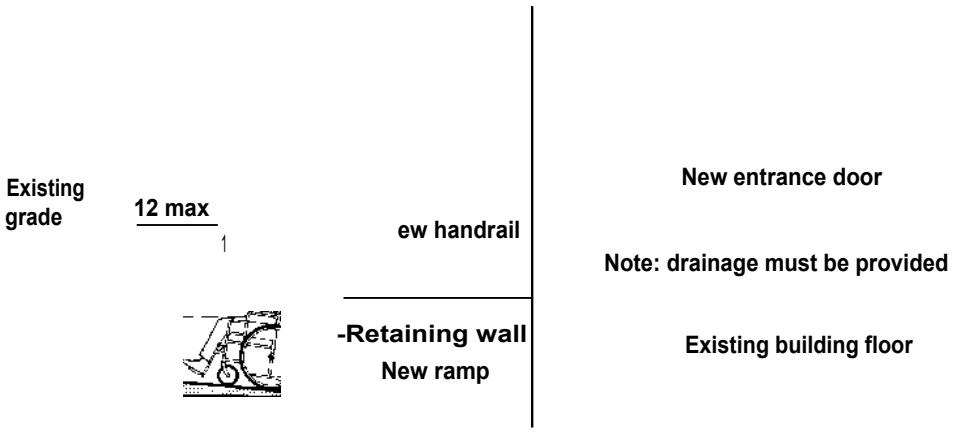

New Entrance to Basement by Exterior Ramp

Existing buildings may have small level changes on a particular floor which make a portion of the floor inaccessible, such as a small flight of stairs in a main corridor. If there is adequate space, a ramp can be constructed at the stairs. Ramps should be 48 inches (1,220 mm) wide if possible, but in no case less than 36 inches (915 mm) wide.

More significant level changes may preclude the use of interior ramps because of the required ramp length. In such cases, an elevator with intermediate stops may have to be provided. For further information, see the sections on indoor ramps, stairs and handrails, which are found in "Architectural Design Features," beginning on page 78.

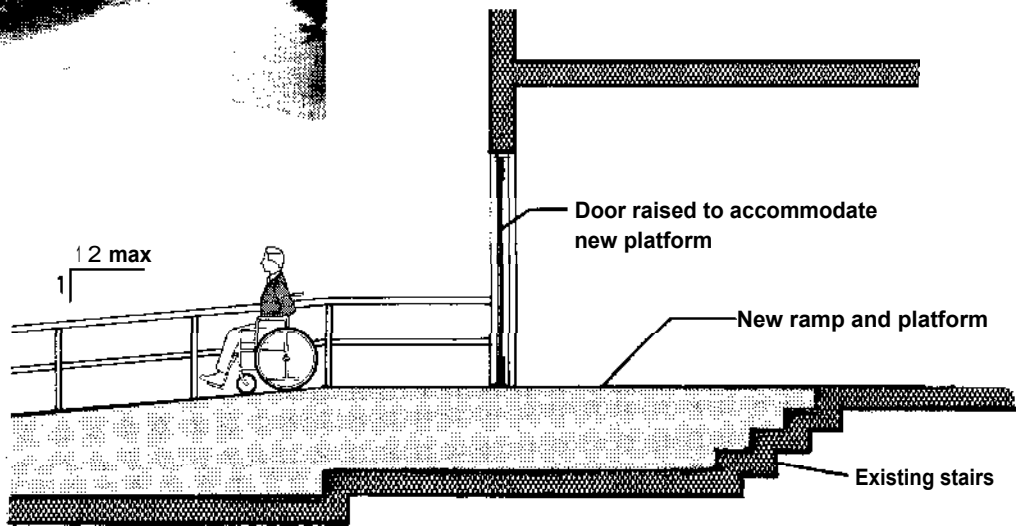

Installation of New Ramp and Platform

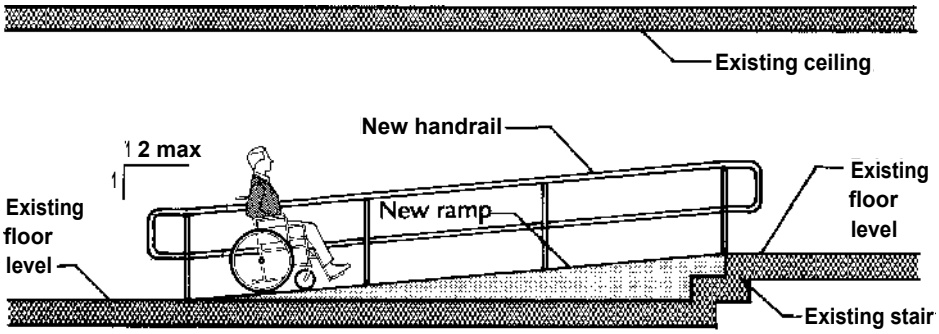

Floor Level Transition by Interior Ramp

Doors and Doorways

A complete discussion of ADA requirements for doors and doorways can be found in "Architectural Design Features," beginning on page 78.

For an existing doorway to be accessible, it must provide a minimum clear opening of 32 inches (815 mm). A 36-inch (915 mm) wide door which provides 34 inches (865 mm) of clear opening is preferred. There are three basic methods by which an existing doorway may be widened.

Two fairly inexpensive and minimally-disruptive solutions are to remove the door or to install offset hinges.

Both of these options can increase the clear opening by the thickness of the door, or approximately 1 to 1-1/2 inches (25 to 38 mm). The required minimum clear width can only be achieved if the existing door itself is at least 32 inches (815 mm) wide. In some cases, removing the door will actually make circulation easier for people with disabilities. In other cases, where privacy must be maintained, swing-away hinges may be the best solution, or a curtain may be used to replace the door.

Enlarging the door opening is the most desirable solution for an existing doorway that has an insufficient clear opening. This option, however, is the most expensive and disruptive to the existing building fabric. If adequate space is available, the opening should be enlarged to accommodate a 36-inch (915 mm) door, which will provide a clear opening of approximately 34 inches (865 mm).

Existing double doors should provide the minimum clear opening of 32 inches (815 mm) when one leaf is open, although a clear opening of 34 inches (865 mm) is preferred. If existing doors do not meet this criteria, the easiest solution is to replace the two equal-sized doors with one wider door and one narrower door. If maintaining two equal-size doors is important for aesthetic reasons, the doors can be wired with an automatic or push-button switch which will open both doors simultaneously. The other solution would be to widen the door opening to accommodate two 36-inch (915 mm) doors.

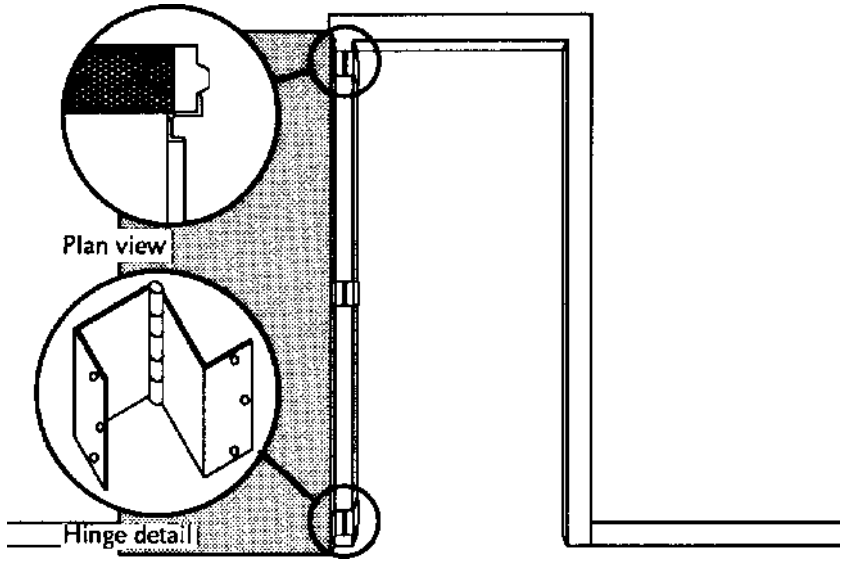

Offset or "swing-away" hinges allow a door to swing out of its opening and can increase the clear opening of an existing door by I to 1-1/2 inches (25 to 38 mm).

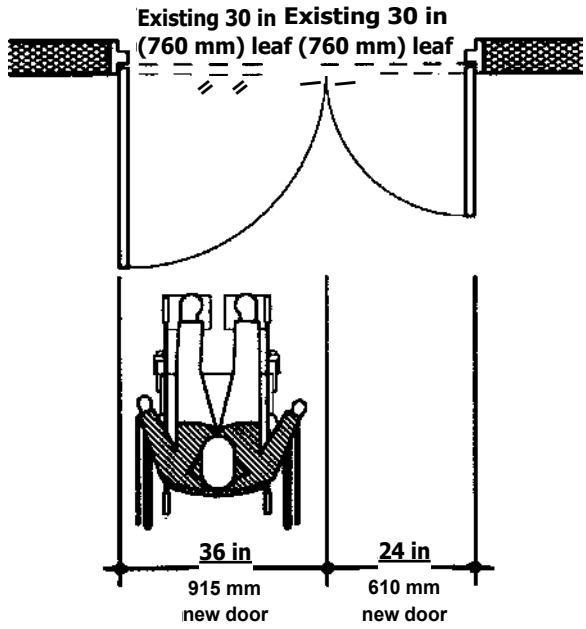

Double Door Modifications

The floor or landing on each side of a doorway should provide maneuvering clearance, as discussed in the section, "Doors and Doorways," beginning on page 80. In some cases, simply reversing the swing of a door can solve the problem of inadequate latch side access. Sometimes a door cannot be reversed because it is in the path of egress, and reversing it would cause the door to swing counter to the means of egress. In this and other cases, the door opening may have to be moved in order to provide sufficient maneuvering space. In both situations, care should be taken to ensure that the new door position does not create an obstruction or hazard for people with disabilities.

Steps at entrance doors should be modified to bring the exterior walk even with the existing interior floor level.

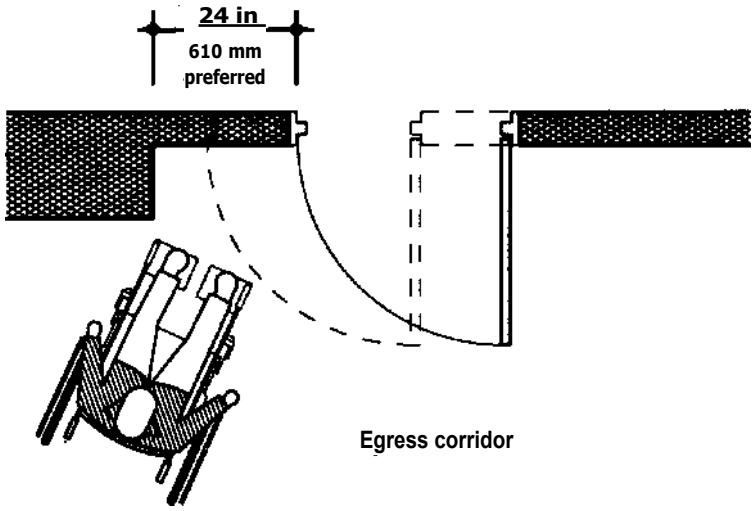

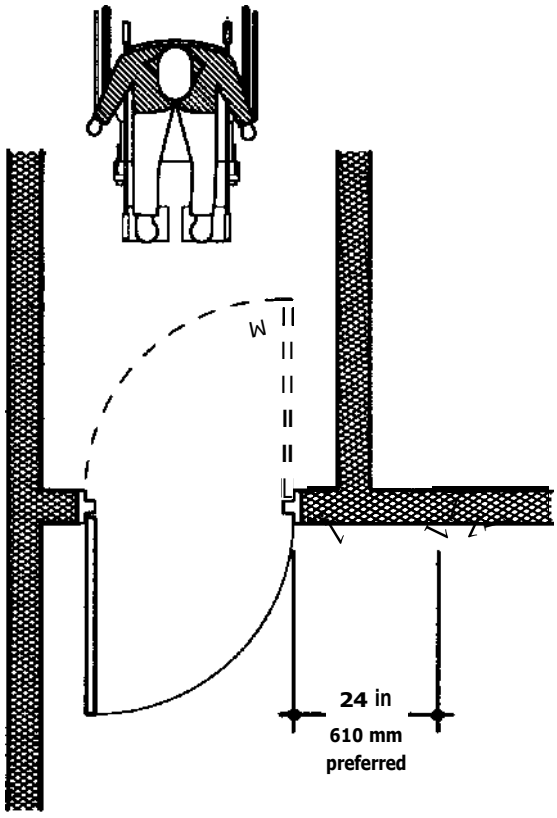

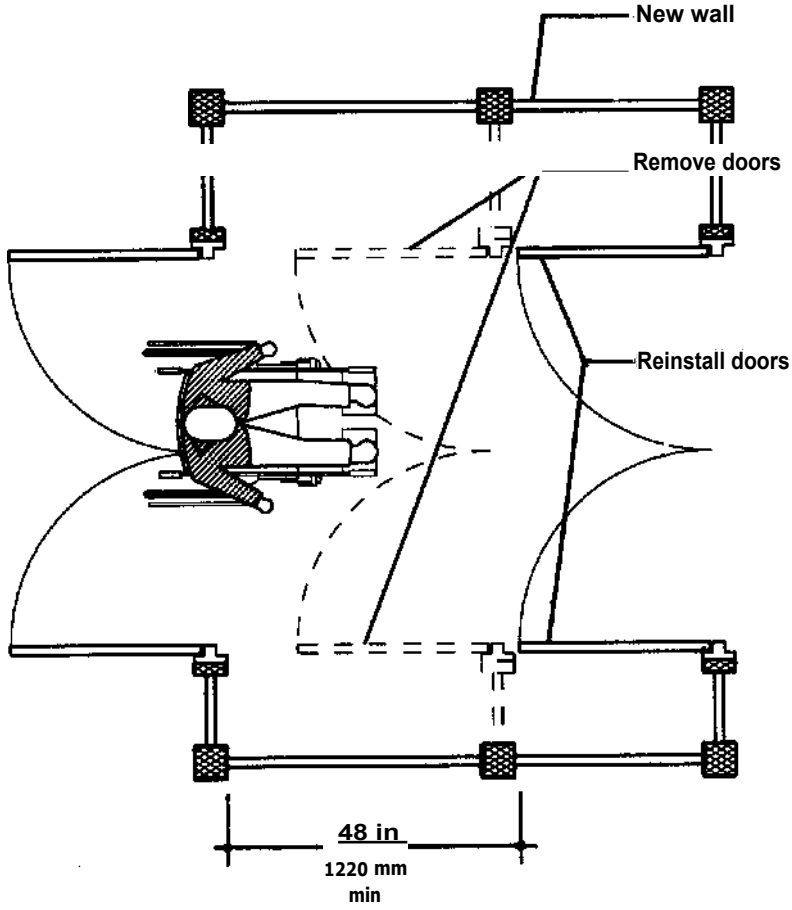

ABOVE LEFT: A door opening may have to be moved to provide sufficient maneuvering space if reversing the door would cause it to swing counter to the means of egress.

ABOVE RIGHT: Enlarging a vestibule provides access.

LEFT: Adequate maneuvering space is provided by reversing the direction of the door swing.

Existing vestibules may not provide sufficient maneuvering space between two sets of doors. In some cases, one set of doors can be removed entirely. If both sets of doors are required for privacy or energy conservation, the vestibule may have to be enlarged.

Door Hardware

Existing door hardware which is difficult for people with limited hand functions to operate should be replaced with hardware which allows doors to be opened by persons with limited hand functions who can utilize elbows, wrists or forearms.

An existing glass door with an inadequate stile (solid area along the bottom edge) should be equipped with a continuous kick plate at least 10 inches (255 mm) high.

Suggestions for hardware, proper mounting heights, key card and computerized entry systems, and knurling are discussed in "Hardware" on page 85.

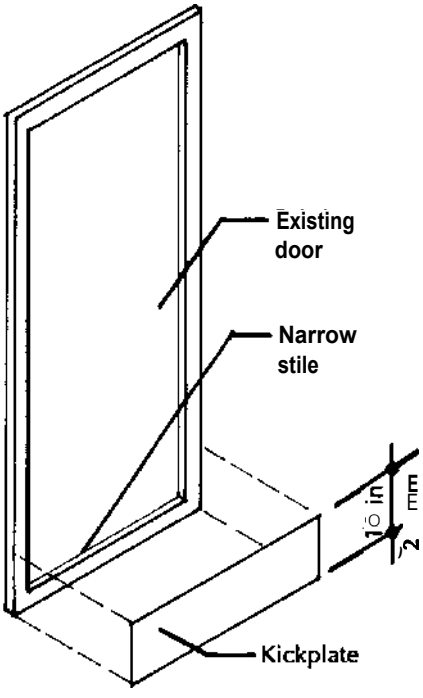

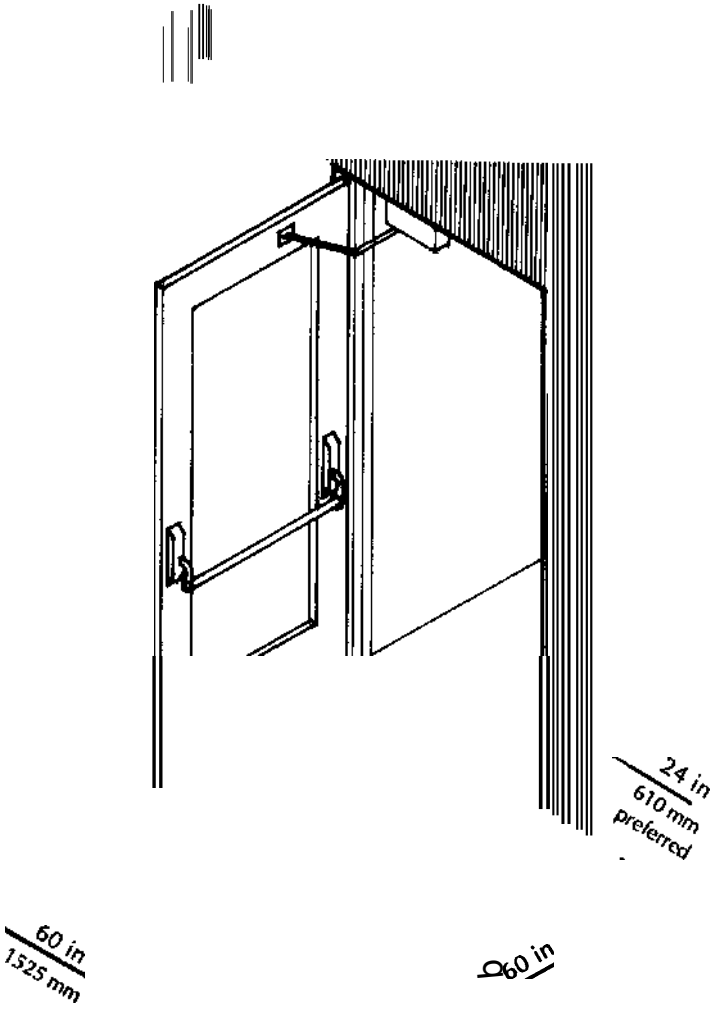

Thresholds
Existing thresholds which create abrupt level changes of more than 1/4 inch (6. 5 mm) prohibit wheelchair passage and can trip people who are walking. These thresholds occur most often at toilet room entrances where floor materials change and create different levels.

Such level changes should be removed, if possible. Where a transition is required, bevelled thresholds less than 1/4 inch (6.5 mm) in height should be installed.

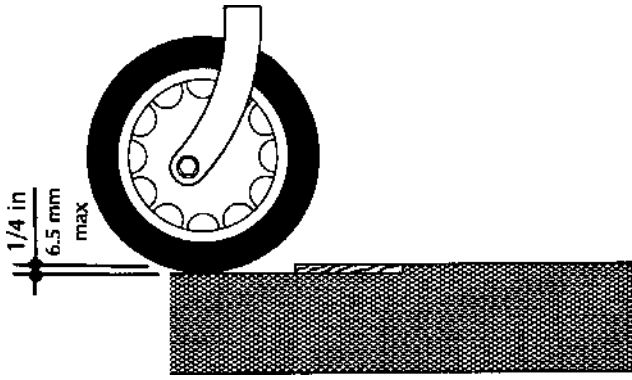

Raised Threshold

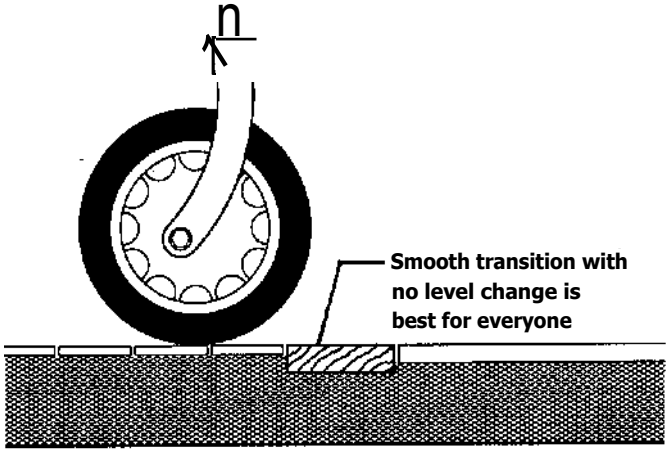

Flush Threshold

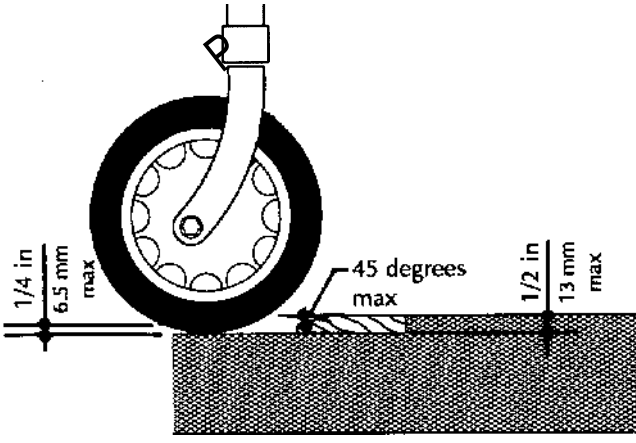

Bevelled Threshold

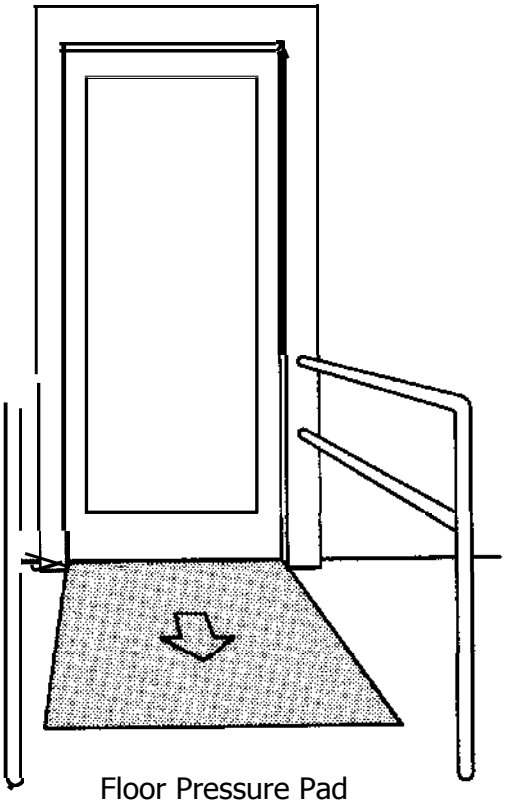

Floor Pressure Pad

Power Doors

The installation of new power doors or the modification of existing doors which operate on power switches or floor pressure pads is strongly recommended when improving the accessibility of a building. This solution is particularly effective in high traffic areas, when an existing door requires a great deal of strength to operate or where sufficient maneuvering space cannot be provided. Side-sliding power doors are preferable to the swinging type. But if swinging-type doors are used, they should always swing in the direction of egress from the building. For further information, see "Building Entrances" on page 79.

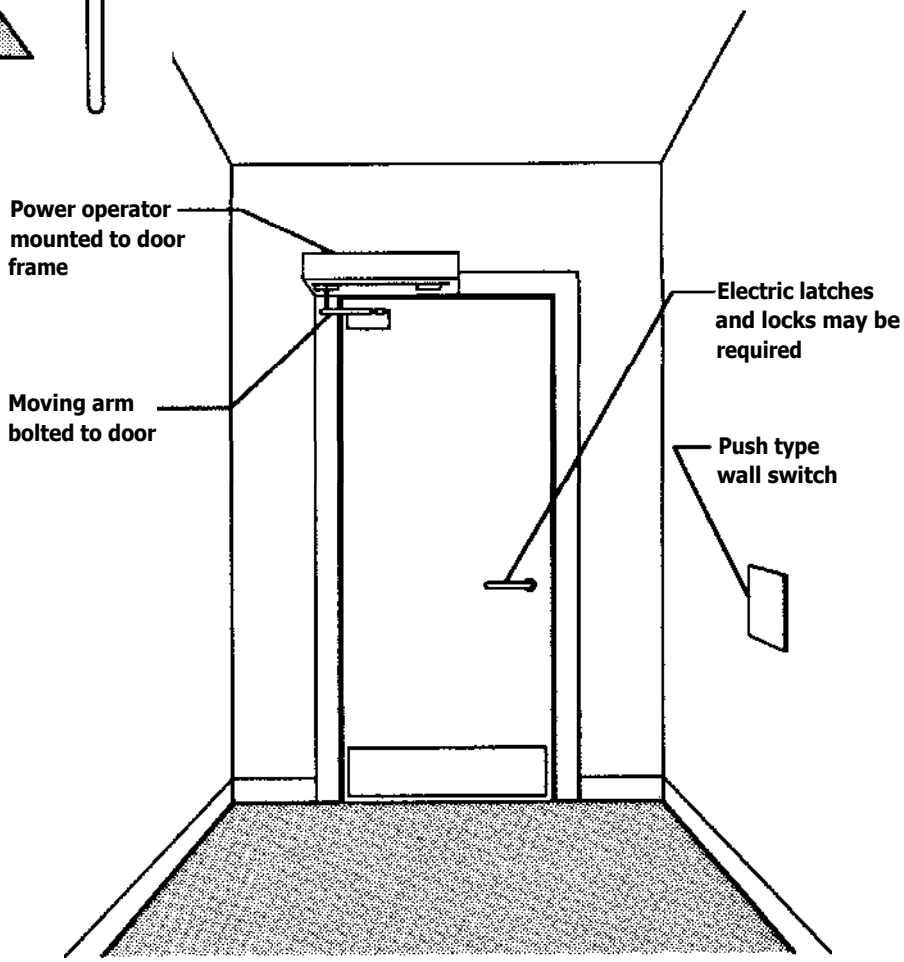

Wall Switch

Stairs

Even if alternate means of vertical circulation (such as ramps and elevators) exist in a building, accessible stairs should be provided as well. For some people, such as those who are aging or use crutches, a flight of stairs is easier to negotiate than a ramp. If existing stairs provide the only means of vertical circulation, it becomes particularly important to modify them for accessibility as required.

Existing stairs may have to be replaced if their risers and treads do not conform to the standards outlined in the section, "Stairs," on page 92. Open riser stairs or stairs with projecting nosings can be modified by filling in the risers.

These modifications greatly increase safety for all users, especially people wearing leg braces.

Handrails
Existing handrails should be extended beyond the top and bottom of stairs to assist people to stabilize their balance before ascending or descending stairs. The requirements for handrail extensions are detailed in the section, "Handrails for Stairs" on page 93.

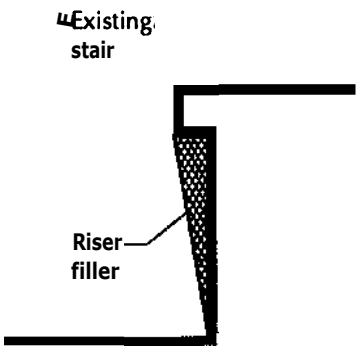

Detail of Riser Filler

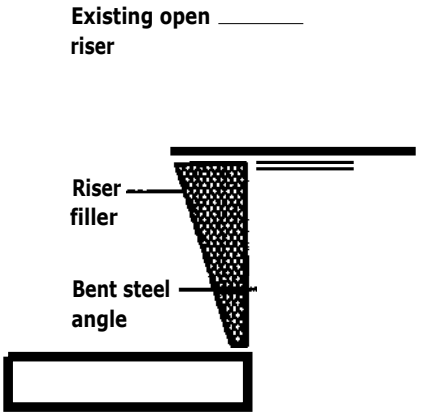

Detail of Riser Filler for Open Risers

Existing handrails which are not within the required height range above stair or ramp surfaces can be supplemented with additional rails at appropriate heights. It is recommended that all ramps or stairs have handrails which allow a variety of gripping heights.

Handrails should be shaped and offset from adjacent wall surfaces so that they may be easily grasped by persons with limited hand strength. Where existing rails do not meet this criteria, they should be replaced or supplemented with ones that do.

Raised numerals on handrails are an aid for persons with visual impairments to identify floor level. Such floor identification can be easily added to existing rails at each floor level. The floor number should be located near the end of the extension at the top of the handrail.

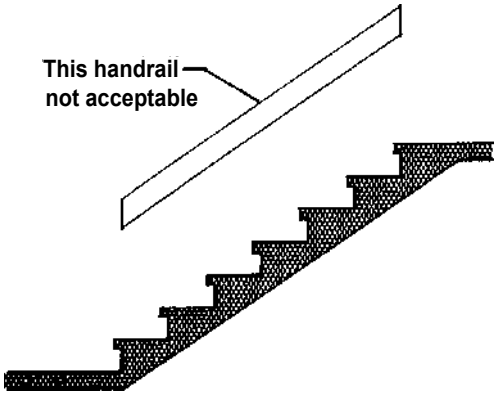

Existing Stair

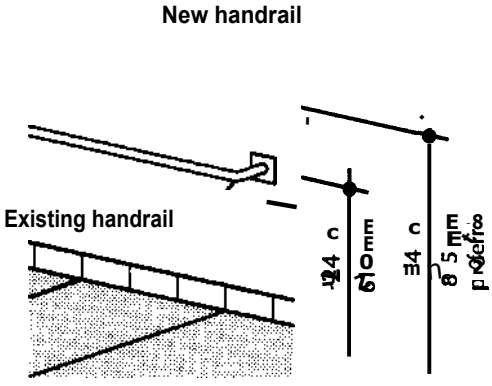

Supplemental Handrail

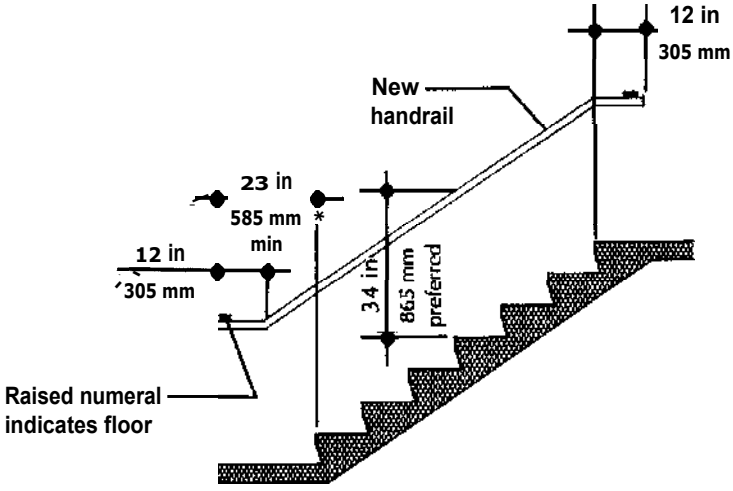

Existing Stair Modified with Riser Filler

Elevator Additions and Modifications

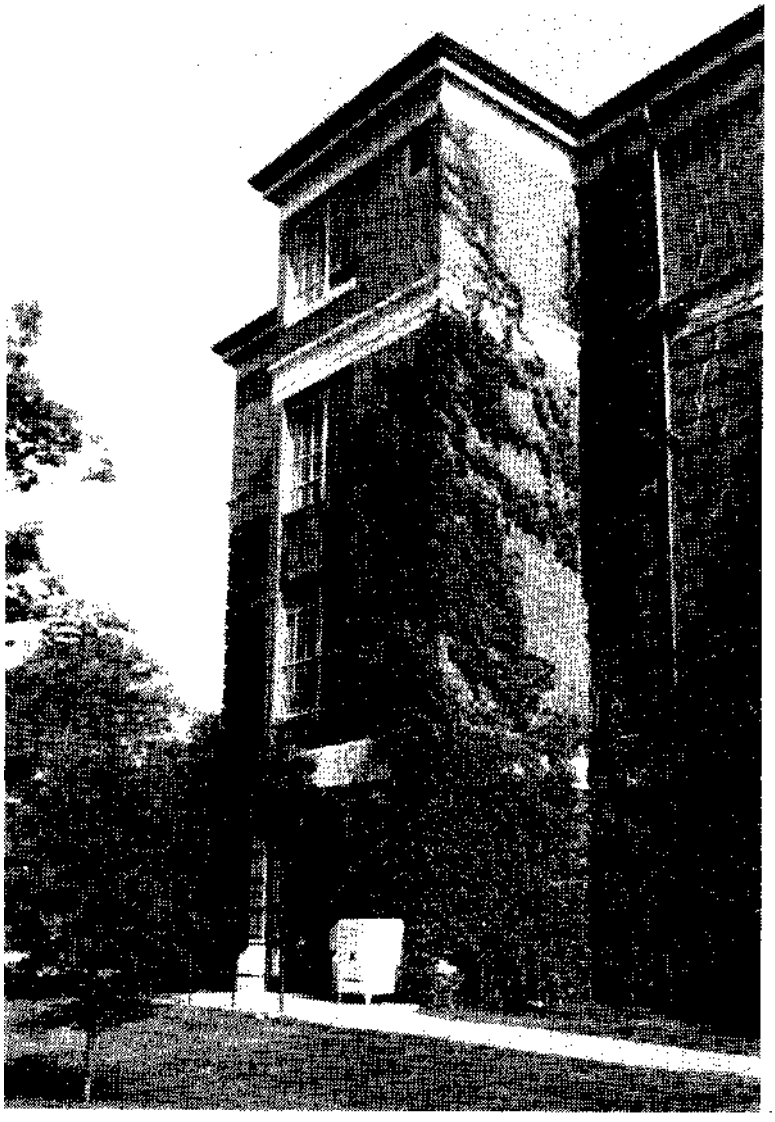

All floor levels of existing buildings should be made accessible. This may require the addition of passenger elevators in buildings where none exist. Elevators should be located close to an accessible building entry, and open into a common space at each floor. In some cases, a new building entrance can be combined with the elevator shaft when an elevator is added to the building exterior.

Existing elevators should be modified or replaced so that they are accessible for all persons. Cab sizes which are at least 60 inches (1,525 mm) square are recommended. If existing control buttons are located higher than 54 inches (1,370 mm) above the floor, a separate set of controls could be installed at an accessible height. Call buttons should be lowered if necessary so that the centerline is 42 inches (1,065 mm) above the floor. Handrails should be added to the cab if none exist.

Other modifications which will greatly increase accessibility include replacing self-levelers which are 1/2 inch (13 mm) or more out of line; the installation or replacement of door re-opening devices; and the installation of an audible signal or verbal floor identification system in the elevator cab.

For a complete discussion of elevator requirements, see the section, "Elevators," beginning on page 94.

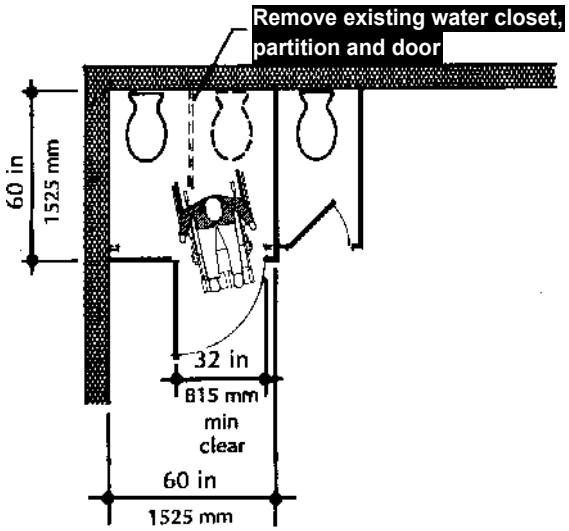

Toilet Rooms

Existing inaccessible toilet stalls are typically 30 to 32 inches (760 to 815 mm) wide and between 56 and 60 inches (1,420 and 1,525 mm) deep.

In toilet rooms with multiple fixtures, an accessible toilet stall can be provided by combining two existing stalls. This option requires removing an existing water closet, installing new partitions and doors, and providing a new door with at least a 32-inch (815 mm) clear opening.

In situations where an existing water closet cannot be spared, a 36-inch (915 mm) wide by 72-inch (1,830 mm) deep stall can be provided by removing the existing partitions and door and installing a new dividing partition and door. Where space or budget is extremely tight, replacing toilet partitions with curtains may provide sufficient maneuvering space for minimal cost.

In all cases, the water closet should be relocated, replaced, or modified if it is too low for safe use by a person in a wheelchair and grab bars should be installed in appropriate locations as outlined in the section, "Toilets and Toilet Stalls," on page 108.

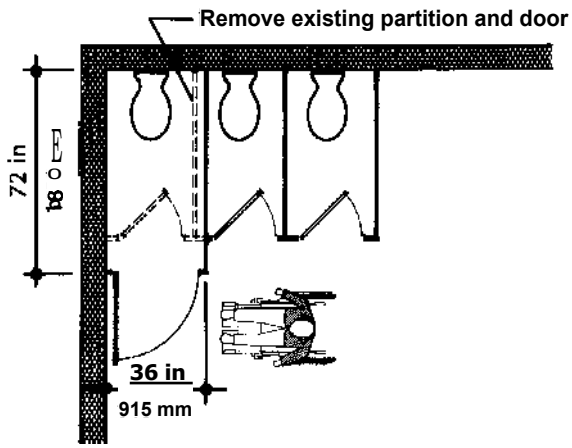

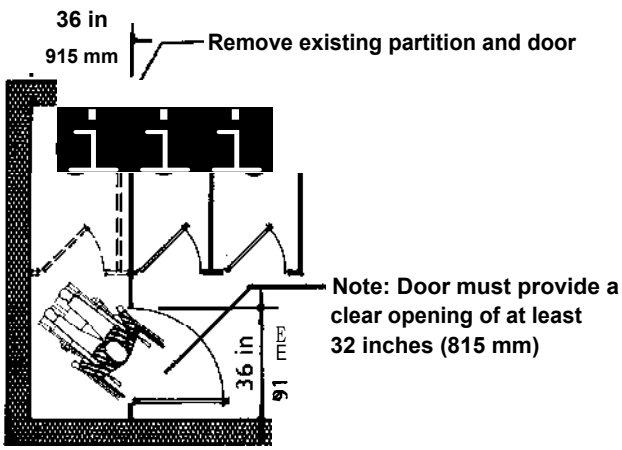

Remodeling Existing Toilet Stalls

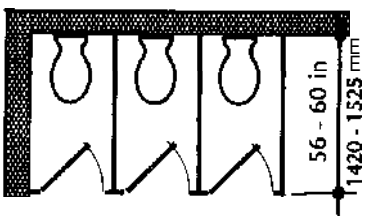

30 in 1 30 in 30 in

760 mm 760 mm 760 mm

Existing Toilet Stall

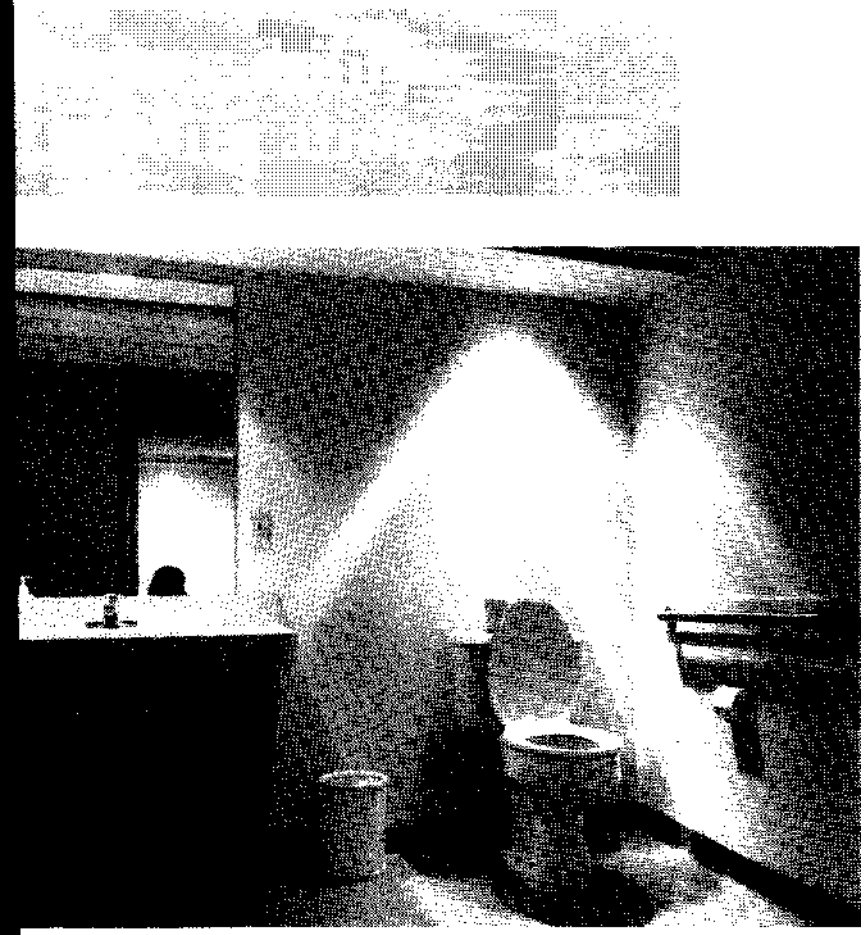

Where existing rest rooms cannot be made accessible, ADA allows a single unisex rest room to be provided.

Because they need additional depth so that persons using wheelchairs can maneuver, it is recommended that accessible toilet stalls be located at the end of a row when multiple toilet stalls are installed.

In most cases, existing lavatories can be modified for accessibility. The lavatory should be raised to provide a minimum knee clearance of 29 inches (735 mm) from the floor to the underside of the lavatory. Lavatory drain outlets and hot water piping which could injure a person in a wheelchair should be shielded and fully insulated.

Existing lavatories which are modified for accessibility should be equipped with lever faucet handles.

Sometimes it may be structurally impossible to modify an existing rest room, or the cost to do so may be prohibitive. In such cases, ADA allows a single, accessible, unisex rest room to be provided. This rest room must be located on an accessible route in the vicinity of existing rest rooms. Acceptable signage must be provided to direct people to the accessible rest room.

For a complete discussion on ADA requirements, see the section, "Toilet Rooms," beginning on page 106.

Privacy Screens and Tight Vestibules

Existing privacy screens often make rest rooms inaccessible. Many times, a screen is located too close to the entrance door, not allowing a wheelchair to turn and enter the toilet room. Screens should be relocated to allow at least a 42-inch (1,065 mm) clear space, but a 48-inch (1,220 mm) clear space is preferable. Careful relocation of screens may allow doors to be omitted entirely, further improving access.

Privacy should not be eliminated or compromised in existing rest rooms, even if moving privacy screens requires removing or relocating sinks or toilets. If space is extremely tight, curtains may replace the screens or doors.

Adequate maneuvering and clear floor space should be provided in existing toilet rooms if at all possible. In addition, an unobstructed turning space as outlined in the chapter, "Basic Human Dimension Data," beginning on page 42, should be provided whenever feasible.

If existing toilet facilities are not accessible, it may be less expensive and more effective to construct a new accessible unisex toilet room rather than renovate existing facilities. At least one such toilet room per floor should be provided. These alternative toilet rooms should be located on an accessible route, in the same area as the existing toilet rooms, and should be clearly marked with visual and tactile signage.

Several relatively minor modifications have the potential to greatly facilitate accessibility in existing toilet rooms. Bathroom accessories and dispensers which are inconveniently located for people with various disabilities can be replaced or supplemented with more conveniently-located accessories. For instance, existing mirrors may be replaced or supplemented by full-height mirrors, which can be used by everyone.

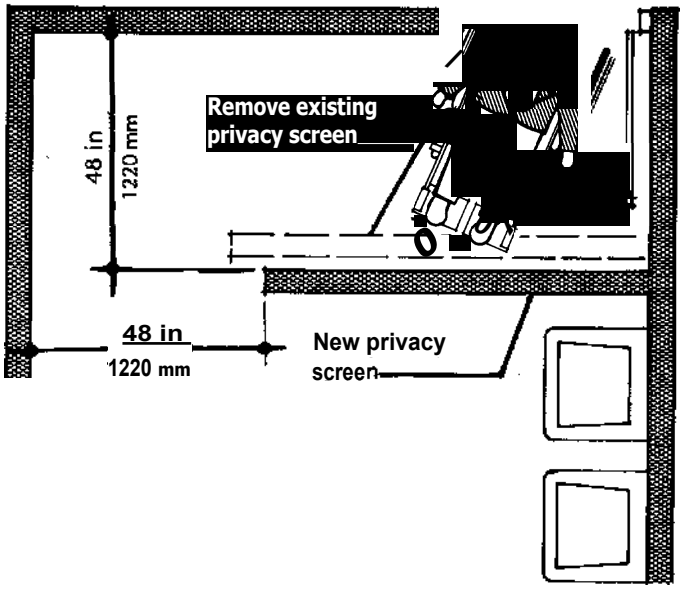

Widening Toilet Room Vestibule by Relocating Privacy Screen

Drink

Existing, wall-mounted fountains can be made accessible by lowering them so that the spout is no higher than 36 inches (915 mm) from floor level to the spout outlet. Another solution would be to locate a separate unit with a spout height of 30 inches (760 mm) alongside the higher one.

The latter solution is particularly good because it provides the option of two heights, which are usable by a variety of people.

If an existing drinking fountain protrudes more than 4 inches (100 mm) into a route which is otherwise accessible, or is located in an alcove which does not provide adequate clear floor space for a person in a wheelchair, an alternative location should be considered.

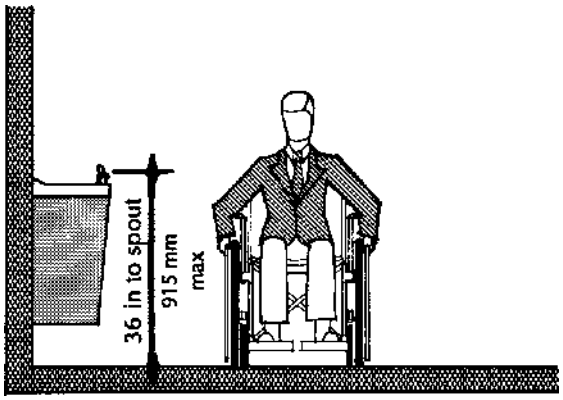

Lowering Wall-mounted Fountain

Public Telephones

At least one telephone per floor in every building should be accessible. The modified telephone should be located in an accessible area where it will not pose a hazard as a protruding object to a person with visual impairments.

If there is only one phone in an accessible area, it is preferable to install an additional phone which is accessible, rather than lower an existing one. This solution will offer a choice of heights for people with various disabilities.

If an accessible phone is added, it should include adjustable volume controls and text capabilities for people with hearing impairments.

Controls

Switches, thermostats and intercoms should be lowered so that people in wheelchairs have the same opportunities to control their environment as people without disabilities.

In addition, existing audible fire alarms should be augmented with some type of visual signal for those with hearing impairments.

See the section, "Conveniences and Controls," beginning on page 116, for further information on accessible drinking fountains, telephones, controls, and signals.

Historic Preservation and Barrier-free Design

Landmark buildings, neighborhoods, open spaces such as parks and squares, as well as street and road patterns are all evidence of past ways of life. These tangible remains of the past contribute to the character and individuality of our communities by forming visually interesting, diverse environments, and providing both a sense of identity and a sense of place.

Many important historic buildings and sites are partially or totally inaccessible to persons with mobility impairments. Since a large percentage of these buildings are used by the public, accessibility modifications should be considered a top priority. However, these modifications must be weighed carefully against their effect on the historic elements of a structure.

The Americans with Disabilities Act recognizes that requirements for total accessibility might destroy the significance of certain historic or landmark buildings, which are referred to as "qualified historic buildings." The following criteria may be used to identify these structures:

1) Properties which have been designated National Historic Landmarks.

2) Properties which are listed or are eligible for listing on the National Register of Historic Places.

3) Properties which are designated as historic under an appropriate state or local law.

For qualified buildings, the Ohio Historic Preservation Office, or the Advisory Council on Historic Pre-servation may determine that any or all of the modifications required by ADA would threaten or destroy the historic significance of the property. If such a determination is made, the qualified building may implement minimum alternative modifications. These minimum requirements include the following:[9]

1) Provision of an accessible route to at least one accessible entrance, as well as to any public spaces on the level of the accessible entrance.

2) Provision of at least one accessible toilet, if public toilets are provided.

3) Provision of displays or written materials so they may be seen by a seated person. Horizontal displays such as open books should not be located higher than 44 inches (1,120 mm) above the floor.

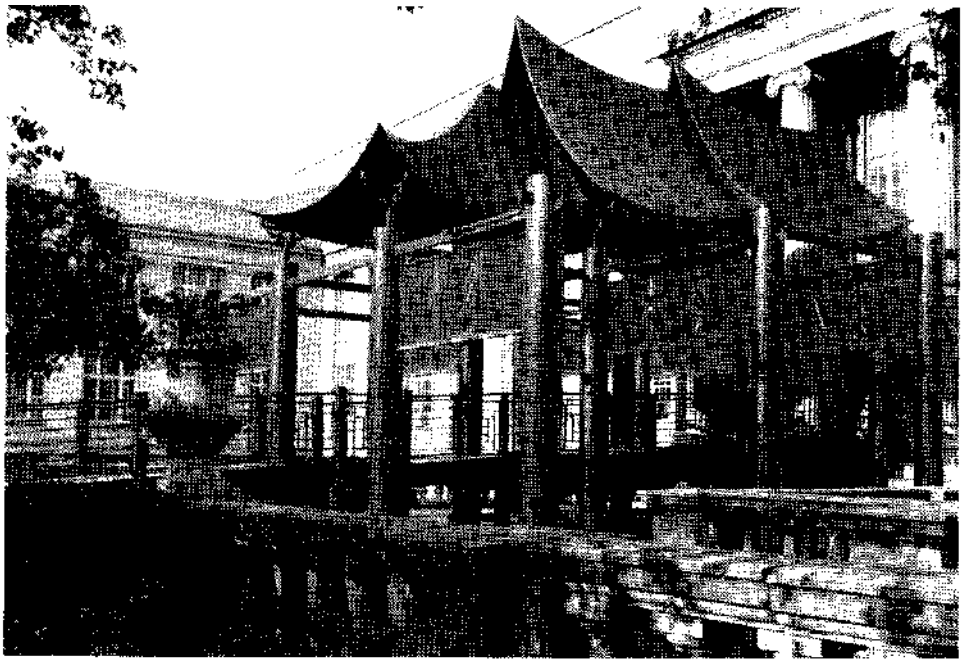

This ramp is an example of a reversible access modification. The ramp can be removed with minimal damage to the historic building.

The sidewalk at this entrance has been gently sloped to allow access to the building. This solution required minimal destruction of historic materials.

These accommodations are intended as minimums, and in many cases, historic buildings and sites can be made significantly more accessible. A recommended goal is to remove the maximum number of barriers without endangering the historic fabric or context of the preservation project. Such a project will require careful cooperation between the owner, state and local historic preservation agencies, local code officials, and a qualified historic preservation architect. Owners of historic buildings or sites are encouraged to consult the staff of the Ohio Historic Preservation Office, located at the Ohio Historical Society offices in Columbus, for more information.

The four basic steps suggested earlier in this chapter for converting an existing facility into one which is barrier-free can also be used for historic preservation projects, with one addition.

For historic preservation projects, Step 1, the Survey of Existing Facilities (see page 201), should also include a survey of the historic significance of the building and site. For extremely prominent projects, such a survey may entail detailed historical research. For other projects, this survey primarily involves identifying the significant historic features which define the unique character of the property.

Clues as to what elements of the building define its unique character can often be found in national, state or local Historic Register nominations; historic inventory forms; or local architectural guidelines. Other factors to consider when evaluating the architectural and historical significance of a building include: category of significance, *i.e.,* National Historic Landmark or local landmark; reason for significance; treatment or existing state of authenticity; use or function; location; and yearly visitation.

The analysis of the data gathered in the significance survey must then be carefully weighed against the need for accessibility modifications to the historic building. The significance survey will undoubtedly reveal the character-defining elements of the building which carry the highest level of significance and should therefore be preserved intact. At the same time, the survey may also reveal areas of the building which are secondary in importance and are more appropriate locations for accessibility modifications.

The highest and preferred level of access to an historic site or preservation project is complete physical access, which means access to the facility in its entirety. In the case of an historic site or museum, direct exposure is generally crucial to visitor appreciation, and any limitation of this exposure or off-site alternative program is less desirable. This ideal level of accommodation should provide independent access to the entire facility, without the help of others, for people with disabilities. Such access might involve criteria which would be above and beyond that required by accepted standards such as UFAS or ADA.

The second level of access is standard physical access which would comply with federal minimum guidelines such as UFAS or ADA. This level of accessibility would be acceptable to local code officials and would likely stand up in court against a civil rights lawsuit. However, this level of accessibility might not provide total access to the entire project for the visitor with disabilities.

The third level of access is below standard physical access. This level would not comply with the guidelines listed above, and might leave owners and operators vulnerable to a civil rights lawsuit.[10]

The third level of access will almost surely deny people with disabilities access to areas of historic importance which would be better experienced in person; this level should be considered only if providing a higher level of access would do irreparable damage to significant historic fabric. Selecting this option must involve a judgment as to whether acceptable physical access has been achieved, as no standard for reasonableness in such cases has been established to date. Thus, it is crucial that staff or citizens with a variety of disabilities be involved when designing for below-standard access to ensure that the level of accessibility will be acceptable in practice as well as in theory.

In the three cases above, some type of architectural change or device will be required. Removable arch itectural devices include such items as portable ramps and wheelchair lifts. Some of these may require a personal aide due to their particular configuration or operation. The use of portable architectural devices may be desirable in cases where special facilities for people with disabilities are needed for a short time; if special considerations require that no alteration be made to the building fabric; or if the ability to temporarily remove the device for special occasions is desirable."

An elevator has been added to this historic lobby in a manner which does not significantly alter the character of the space.

Two types of permanent architectural changes, reversible and non-reversible, may be made to an historic building. A reversible change does not involve the removal of significant amounts of historical material, and leaves either no damage or easily-repairable damage to that fabric. Non-reversible changes involve the removal or destruction of significant historic finishes, details, and design or spatial characteristics. Non-reversible changes have a negative effect on historic buildings and should be avoided whenever possible.

Where physical access on one of the three levels described above would cause irreparable damage to significant historic features, alternative accommodations such as program or activity changes, either on an administrative or interpretive level, may be made. Providing such accommodations alone will not guarantee conformance with ADA's minimum requirements for accessibility in historic buildings, and should be considered only after all other possibilities have been exhausted.

People with a variety of disabilities should be consulted when making decisions concerning alternative accommodations. In buildings where the ADA minimum accessibility has been met, alternative accommodations can be useful for a greater degree of accessibility or a more complete experience of the historic site than would be possible with ADA minimums.

Examples of administrative accommodations include the following:

1) Moving an inaccessible activity to an accessible location within the building or sometimes to an entirely different, possibly new, accessible building. An example would be moving public-oriented offices or meeting rooms to the ground level of a house which has been restored as an office building.

2) Allowing people with disabilities to enter the building through an accessible non-public entrance.

3) Re-routing a tour for visitors with disabilities so that a physical barrier (such as a narrow door) is bypassed.

4) Furnishing special equipment for people with disabilities, such as a narrow wheelchair, headsets, binoculars, magnifying glasses or special printed information.

5) Using a modified vehicle to provide access over gravel or uneven terrain or to extensive grounds.

6) Moving an exhibit to an accessible location at the site.[12]

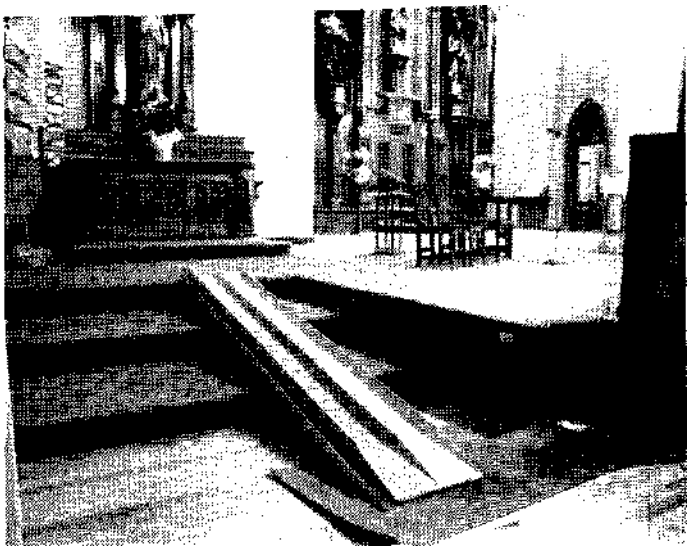

7) Providing a delivery program to bring goods and services to an accessible location or to the homes of people with disabilities would be feasible only if the facility located in an historic building is not interpretive in nature. In such cases, it is imperative that the availability of this delivery service be made known to people with disabilities in the community."

Another type of alternative accommodation involves the use of interpretive or substitute materials. In the case of historic sites, interpretive materials allow visitors with disabilities to experience inaccessible parts of the site through exhibits, audio-visual presentations, staff briefings, and printed materials.

Examples of interpretive accommodations include the following:

1) Creating a mock-up of an historic room and locating it in a visitors center.
2) Providing photographs of inaccessible rooms.
3) Developing audio/visual presentations of the site and showing them in an accessible location.
4) Providing movies or videos with subtitles for people with auditory impairments.
5) Providing braille or audio versions of written material for people with visual impairments."
6) Providing tactile interpretive aids such as models, which are especially important for people with visual impairments.

It bears repeating at this point that administrative, interpretive or substitute accommodations should be used only as a means to supplement the service or historic experience provided to people with disabilities. These types of accommodations should not substitute for providing at least the minimum level of physical accessibility required by ADA, or preferably, the maximum amount of physical access possible without endangering irreplaceable historic building elements.

Many existing buildings and sites, even those built just a few years ago, are virtually inaccessible for people with disabilities. As a result, public perception holds that all old buildings and historic sites are inaccessible. Information on accessible accommodations is often available only at the site or by calling ahead with specific questions. When accessibility modifications are made to an existing building or historic site, they should be publicized, both as a service to people with disabilities and as a means to reach a wider audience of potential visitors.

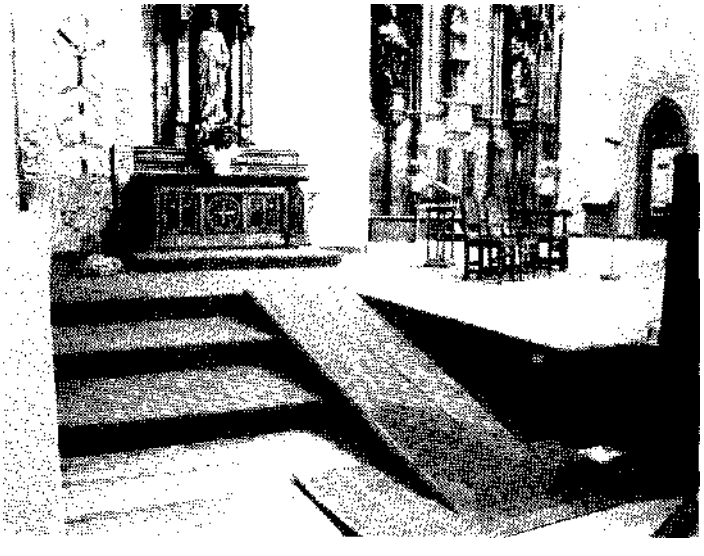

This removable ramp allows people in wheelchairs access to the altar, allowing clergy and lay ministers with disabilites to participate in the service.

ENDNOTES

1. U.S. Department of Justice, Office of the Attorney General. *Federal Register,* Nondiscrimination on the Basis of Disability by Public Accommodations and in Commercial Facilities; Final Rule, Vol. 56, No. 144, Subpart B, Sections 36.202(a) and 36.203(a) (Washington, DC: July 26, 1991), page 35594.

2. *Federal Register,* ibid., page 35597.

3. Building Owners & Managers Association International, *ADA Compliance Guidebook: A Checklist for Your Building* (Washington, DC: 1991), page 7.

4. Ibid., pages 11-81.

5. Ibid., page 7.

6. Ibid.

7. *Federal Register,* op. cit., page 35598.

8. Commonwealth of Massachusetts, *Access Improvements Workbook, Help for Facility Managers in Preparing Capital Budget Requests,* prepared by the Adaptive Environments Center and Welch + Epp Associates (June 1988), page 14.

9. ADAAG, pages 13 and 19.

10. U.S. Department of the Interior, National Park Service. *Accommodation of Handicapped Visitors at Historic Sites, Volume 1 GUIDE* (Washington DC: October 1979), page 2.

11. Charles Parrott, *Access to Historic Buildings for the Disabled: Suggestions for Planning and Implementation,* TPS report for the U.S. Department of the Interior, Heritage Conservation and Recreation Service, Technical Preservation Services Division (Washington DC: April 1980), page 21.

12. *Accommodation of Handicapped Visitors at Historic Sites,* op. cit., page 3.

13. *Access to Historic Buildings for the Disabled,* op.cit., page 23.

14. *Accommodation of Handicapped Visitors at Historic Sites,* op. cit., page 4.

15. *Access to Historic Buildings for the Disabled,* op.cit., page 23.

Thoughts on Costs versus Benefits

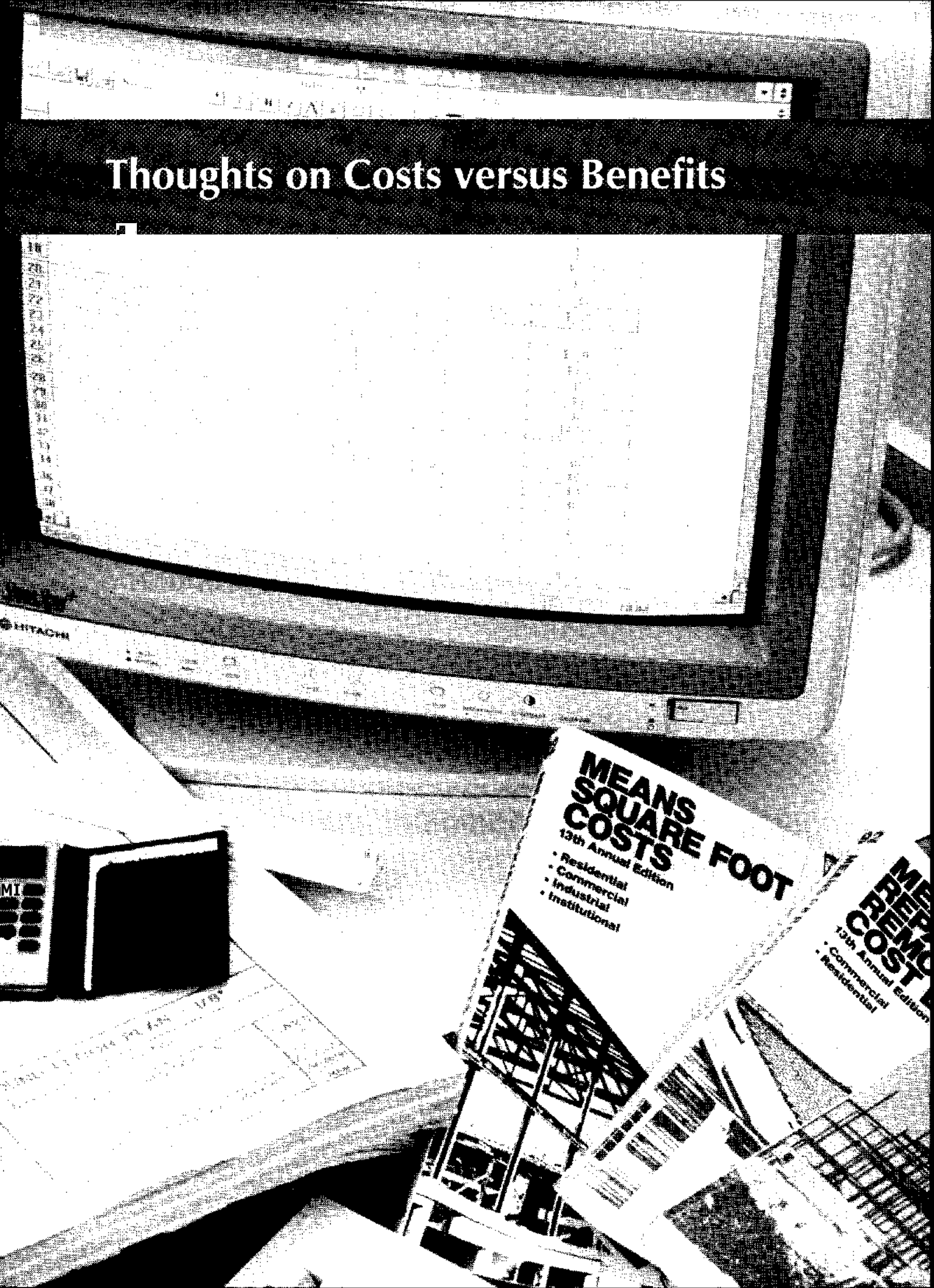

Thoughts on Costs versus Benefits

This chapter is intended to correct some of the most common misconceptions regarding the costs and benefits of barrier-free design. Although most people would agree with the principle of equal rights for people with disabilities, many property owners balk at what they perceive to be the high cost of creating an accessible environment. In addition, some owners complain that accessible design is unnecessary because people with disabilities do not make use of their facilities on a regular basis.

The argument that a barrier-free environment is costly is untrue in most cases; evidence presented in this chapter will quickly dispel this notion. The argument that people with disabilities rarely use particular facil ities is circular; people with disabilities have been kept isolated from using many public facilities because, for the most part, these facilities remain full of physical and communication barriers.

Perhaps the most important part of this chapter is the section which deals with the benefits of accessible design. The benefits of a barrier-free environment to people with various disabilities were discussed in the chapter, "Who Benefits From a Barrier-free Environment?" By illustrating the expanded market which can be tapped by owners of accessible public facilities, this chapter will discuss the benefits of a barrier-free environment for people who own and operate places of public accommodation.

Costs in New Construction

In designing a building, the architect should think in terms of access for all persons. A barrier-free facility is convenient and safe for everyone and its design does not exclude persons with disabilities.

When incorporated into the initial planning stages, the cost of barrier-free design is minor. Various studies have offered estimates between 0.1 and 1.0 percent of total construction cost for implementing integrally-designed barrier-free elements. The figure of 0.5 percent is widely accepted by analysts as a "ball park" figure.' The following two studies indicate that accessibility need not be costly, especially when compared to total construction costs.

The first study, performed by Dale Daucher for the Architectural and Transportation Barriers Compliance Board, estimates that the cost of including all accessibility features required by ADA into new construction would range from .16 to 1.14 percent, depending on the type of project.[2]

In the second study, Perkins and Will, Architects, sent a questionnaire to local officials and architects which dealt with the costs of barrier-free construction. The responses they received revealed two important points:

1. Eliminating architectural barriers during construction would not have been a major cost consideration to cities and counties in projects that have since proven to be inaccessible.
2. Less than 10 percent of the architects surveyed felt that a fully-accessible building would be prohibitively costly.[3]

Thoughts on Costs versus Benefits

Specific cost data on barrier-free design can only be determined on a case-by-case basis. Certain features incorporated to achieve accessibility cost more than conventional items. However, cost differences may often be offset during construction. For instance, a 36-inch (915 mm) wide door generally costs more than a 30-inch (760 mm) wide door, but including a wider door decreases adjacent partition cost.

Sometimes an accessible element which is more beneficial to people with disabilities is actually less costly than another, less beneficial element. For example, walks which have slopes of 1:20 (5 percent) or less are easier for everyone to negotiate and are less expensive to build than ramps. Ramps with slopes between 1:20 (5 percent) and 1:12 (8.33 percent) involve an additional cost for handrails, which are not required on walks.

NEW CONSTRUCTION PROJECTS
(ESTIMATES INCLUDE ALL ACCESSIBILITY FEATURES)
(Figure 1)

	Cost of Construction	Square Footage	Cost per Square Foot	Est. Cost to make Accessible	Cost per Square Foot	Percent of Project Cost
High-rise Office Building	$61,725,000	750,000	$82.30	$ 98,070	$0.13	0.16%
Low-rise Office Building	15,348,000	240,000	63.95	27,971	0.12	0.19%
High-rise Hotel	31,590,000	450,000	70.20	100,731	0.22	0.32%
Low-rise Hotel	9,645,750	135,000	71.45	60,885	0.45	0.63%
Auditorium	1,963,200	24,000	81.80	11,690	0.49	0.60%
Movie Theater	843,600	12,000	70.30	9,651	0.80	1.14%

Source: *Regulatory Impact Analysis for Final ADA Accessibility Guidelines for Buildings and Facilities (draft),* U.S. Architectural & Transportation Barriers Compliance Board, October 10, 1991.

Thoughts on Costs versus Benefits

When included in initial plans, barrier-free construction may not entail any additional costs. For example, the entrance could be made at grade level, rather than one step up. Or elevator control panels, which are set at the proper height and have braille control button labels, could be included at no additional cost.

Incorporating barrier-free features which will permit optimum use of the building or facility by the maximum number of people, with or without disabilities, is basically a matter of good planning in the new construction process.

COMPARATIVE COSTS TO REMOVE BARRIERS BY ALTERATION OR TO INCLUDE IN INITIAL CONSTRUCTION

(Figure 2)

		Project Cost	Est. Cost to Remove Barriers by Alteration	Percent of Project Cost	Est. Addtl Cost to Initially Make Accessible	Percent of Project Cost
Navy	Chief Petty Officer's Club Newport, Rhode Island	$2,032,961	$ 16,684	.82	$ 4,564	.22
Navy	Electronic Weapons Precision & Engineering Facility, Philadelphia Navy Yards, Pennsylvania	17,929,605	312,061	1.74	100,879	.56
HEW	Horizon House Philadelphia, Pennsylvania	11,007,095	17,194	1.56	8,212	.75
HEW	Pennsylvania College of Pediatric Medicine Philadelphia, Pennsylvania	13,920,115	60,463	.43	16,766	.12
HUD	Germantown House Philadelphia, Pennsylvania	7,428,085	4,635	.06	772	.01
HUD	Compton Towers Wilmington, Delaware	5,526,562	13,904	.25	772	.01
GSA	Dover Federal Office Building, Dover, Delaware	2,821,678	25,652	.91	4,024	.14

Source: *Report to Congress,* "Further Action Needed to Make All Public Buildings Accessible to the Physically Handicapped," by the Comptroller General of the United States, 1975.

Please Note: All cost figures have been converted to 1990 prices through the use of the GNP fixed-weighted price index.

Renovation and Rehabilitation Costs

Titles II and III of ADA provide two basic requirements for alterations to places of public accommodation: 1) all altered portions of the facility must be made accessible to the maximum extent feasible; and 2) alterations may not decrease the accessibility of the rest of the facility. A renovation project, even if it does not involve the entire building, provides a great opportunity to plan accessibility modifications for the entire facility.

The cost to alter an existing, inaccessible building is more than that of initial barrier-free construction; but it is still relatively small when compared to the total construction cost.

One of the reasons that accessibility modifications are more costly than new construction is because often an element or part of the structure must be removed before accessible features can be installed.

Although a direct comparison of the costs of modifications to the original construction costs is difficu It to make, various studies have established percentages in the range of 1 to 3 percent of project costs.[4]

A third category of alterations includes those which are made for the sole purpose of increasing the accessibility of a facility in response to ADA requirements, or as voluntary modifications above and beyond ADA requirements. Title III of ADA only requires the removal of barriers to the extent that such measures are "readily achievable." The level of alteration which is considered "readily achievable" will depend on the financial resources of the facility and will vary greatly from one facility to another. As a result, it would be almost impossible to calculate accurate, average cost estimates for such alterations. A preliminary report published in February, 1991, by the Department of Justice estimated that "readily achievable" barrier removal in an average business may cost as little as $100-300 per firm.

Thoughts on Costs versus Benefits

To further complicate cost estimating, the ADA provides alternatives to barrier removal. The Department of Justice study estimated that procedural changes to satisfy alternate accommodations could be made with minimal cost.

Regardless of the reasons for making alterations to a building, one should always view the renovation of a public facility as an opportunity to maximize accessibility.

Increasing usability should be the main focus of any alteration or barrier removal project. In many cases, minor changes or inexpensive additions can make a building usable by people with disabilities. Minor changes which would make a significant impact might include repositioning shelving, toilet accessories, telephones, and drinking fountains; installing visual (strobe light) alarms, grab bars and accessible door hardware; or replacing inaccessible floor surfaces with accessible ones.

"Readily achievable" barrier removal in an average business may cost as little as $100-300 per firm.

In some cases, an expensive modification may appear to be required for accessibility when the same goal can actually be achieved by a simpler, less expensive means. An example would be creating an accessible toilet stall in an existing restroom: replacing the stall partition or door with a curtain might provide enough maneuvering space to make the stall useable for a person with a disability, and it would be much less expensive than relocating all of the existing fixtures and partitions.

Thoughts on Costs versus Benefits

When considering the removal of barriers in existing buildings, it is necessary to view the project in its entirety and set priorities for modification. Barrier removal priorities will vary significantly from one building to another. Priorities for accessibility should be considered on an individual facility basis and be based on considerations of such issues as building use, economics and type of construction.

Certain priorities apply, however, to all accessibility improvement projects:

- Site considerations and access to the building.
- Movement to and use of primary facilities (class rooms, offices, laboratories, etc.)
- Toilet and other support facilities.'

Indirect Costs

The provision of accessible features in new construction or alteration projects may involve some costs beyond the actual price of the new or modified accessible element. Indirect costs may include reallocation, maintenance and litigation costs.

Reallocation costs refer to the loss of leasable, sales or display space due to the increased space required for accessible elements. An example would be the lost display space in a store when check-out aisles are widened to make them accessible, or the loss of leasable space in a multi-story office building to make room for areas of refuge.

Maintenance costs include the cost of cleaning, repairing or maintaining accessible elements. As an example, ice and snow tend to collect at curb ramps with detectable warnings. It is generally more difficult and costly to remove snow and ice from these curb ramps than from standard curb areas.

Certain public facilities may be highly vulnerable to the threat of litigation and may make accessibility accommodations above and beyond those required by ADA. The cost of such additional modifications should be taken into consideration as an indirect expense.

Many of these additional costs can be kept to a minimum or avoided altogether through careful design. Attention to accessibility issues and potential barriers should begin in the earliest design phases of a new construction or alteration project. Using access for all as a design goal throughout a project will decrease the chance that accessibility features will cause significant indirect costs.

The Benefits of Accessible Design

The cost studies presented in this handbook illustrate that accessible design does not have to be expensive, especially when maximum accessibility is a goal from the earliest design phase of a project. However, none of these studies really explore the issue of how many people need or would benefit from the accessible environment provided at so little cost. There are no definitive statistics which show the number of people who would benefit from increased accessibility, but there are a few studies that have explored related issues. Two are particularly appropriate to the issue of costs versus benefits, and are as follows.

Thoughts on Costs versus Benefits

The first study, conducted by the International Center for the Disabled in cooperation with the National Council on the Handicapped, explored the extent to which people with disabilities are limited in their participation in society. The study was based on a survey of 1,000 people who had a variety of disabilities. This survey did not attempt to determine whether the reasons for decreased participation were physical or psychological. Anecdotal evidence, however, suggests that one major factor may be the inaccessible environment. The results of this study are summarized in Figures 3 and 4.

A quick study of these charts reveals that, on the whole, people with disabilities lead a more isolated life than the general population, and participate primarily in those activities which are driven by need, such as grocery shopping.

ATTENDANCE OF MOVIES, THEATER, AND LIVE MUSIC PERFORMANCES
ADULTS WITH DISABILITIES VERSUS ALL ADULTS
(Figure 3)

	None	Once	2-3 Times	4-5 Times	6-10 Times	11-20 Times	20 Times	Not Sure
Movie Attendance in Past 12 Months								
% Adults w/disabilities	64	8	13	5	5	3	2	
% All Adults	22	7	19	11	15	14	12	
Attendance of Live Theater Performance in Past 12 Months								
% Adults w/disabilities	77	8	9	3	2	1		*
% All Adults	40	8	26	11	10	4	1	1
Attendance of Live Popular Music Performances in Past 12 Months								
% Adults w/disabilities	77	8	8	4	1	1	*	*
% All Adults	47	10	23	8	7	3	1	*
Attendance of Sports Events in Past 12 Months								
% Adults w/disabilities	66	6	10	5	5	4	3	**
% All Adults	50	8	11	7	8	6	9	**

*Less than 0.5%.

Source: *The ICD Survey of Disabled Americans: Bring Disabled Americans into the Mainstream.* Conducted for International Center for the Disabled, in cooperation with National Council on the Handicapped, by Louis Harris & Associates, Inc., March 1986.

Thoughts on Costs versus Benefits

One way to look at the accessibility cost versus benefits equation is to take one of the categories of participation in an activity and compare it to the cost of making the facility for that activity accessible. Using movie theaters as an example, Figure 3 reveals that 64 percent of adults with a disability did not attend a movie even once in the last 12 months. This figure compares with 22 percent of the population without disabilities who did not attend a movie even once in the last 12 months.

Assuming that at least 22 percent of the 64 percent of people with disabilities who did not attend a movie would not do so even if the theaters were accessible, that would still leave 50 percent of the people with disabilities as a potential market.

It is estimated in Figure 1 that making a movie theater accessible would cost an additional 1.14 percent of project costs. The additional 1.14 percent does not seem to be an exorbitant expenditure to increase a potential market by the local share of 20 million people (50 percent of the estimated 43 million people with disabilities).

SUPERMARKET VISITS, CHURCH ATTENDANCE AND RESTAURANT VISITS PEOPLE WITH DISABILITIES VERSUS PEOPLE WITHOUT DISABILITIES
(Figure 4)

	At Least Once a Week			Less Than Once a Week				
	More Than Twice a Week	Twice a Week	Once a Week	2-3 Times a Month	Once a Month	Less Than Once a Month	Never	Not Sure/ Refused
Supermarket Visits								
% People with Disabilities	15	16	31	12	8	5	13	
% People without Disabilities	29	26	21	7	2	1	2	1
Visits to a Restaurant								
% People with Disabilities	9	7	18	14	18	16	17	**
% People without Disabilities**	18	14	26	15	12	8	5	
Church or Synagogue Attendance								
People with Disabilities	5	5	30	7	9	12	32	1
% People without Disabilities**	5	5	40	6	7	14	19	1

*Less than 0.5%.

**Based on a 1986 national sample of 1,120 adults aged 18 and over who say that they don't have a limiting disability or health problem.

Source: *The ICD Survey of Disabled Americans: Bring Disabled Americans into the Mainstream,* conducted for the International Center for the Disabled, in cooperation with the National Council on the Handicapped, by Louis Harris & Associates, Inc., March 1986.

Thoughts on Costs versus Benefits

The second study was conducted for the Architectural and Transportation Barriers Compliance Board in 1988, and attempted to determine the exact number of people who would benefit from certain accessibility features. This study began by estimating the prevalence of certain functional limitations by category among the adult population of the United States. Next, the study developed a comprehensive list of architectural features which improve access to the built environment, such as ramps, handrails and audible/visual alarms. Each feature was then matched with a category or categories of functional limitation for which it was necessary or merely an aid to access.

Results of this study are summarized in Figure 5. This chart has been revised to include a column which lists the cost of each accessibility feature. One interesting fact which this chart reveals is that some of the most inexpensive design features benefit the largest number of people.

A barrier-free environment provides flexible surroundings which will still be accessible as normal age changes occur.

The need and benefit estimates from the study summarized in Figure 5 include people over the age of 65 who experience one of the limitations covered by the study. Although the study is comprehensive in the wide range of types and levels of disabilities it covers, it does not necessarily include all elderly people.

Not everyone over the age of 65 has a measurable disability; but this does not mean that their capabilities are the same as those of the younger, "average" person for whom most of the environment is designed. Elderly people who are beginning to experience mild limitations on their mobility, activities, sensory acuity or cognitive skills can benefit from accessible design as much as people with temporary or mild activity limitations. A barrier-free environment also allows people to age in place; that is, it provides flexible surroundings which will still be accessible as limitations grow.

All of these benefits become extremely significant when one considers that the fastest growing segment of the population and that which has the greatest amount of disposable income is the elderly. It is estimated that the number of elderly persons in the U.S. will double in the next 40 years. This is a large and important market which some companies are just beginning to target. Aside from its benefits to the elderly population, places of public accommodation profit when accessible design helps them attract and keep this wealthy and growing share of the market.

Just as there are indirect costs to creating an accessible environment, there are indirect benefits from such an environment. These benefits are not necessarily revealed by studies such as the one summarized in Figure 5. Even people without disabilities may benefit from features such as ramps or grab bars, which reduce the risk of injury for everyone. Other accessible features such as wider passages and openings benefit anyone who is temporarily inconvenienced by pregnancy, carrying bulky objects or pushing a stroller.

When one compares the rather small cost of creating accessible sites and buildings to the surprisingly large number of people who benefit from such features, the following conclusions can be drawn:

1. The cost of accessible elements on a per person basis is insignificant when divided among all the people who will benefit from these elements.
2. The cost of creating an accessible place of public accommodation will more than pay for itself by means of the expanded market which it creates.
3. Accessibility modifications and features should be advertised in order to reach this potential market; these features can become a significant marketing tool in and of themselves.
4. Cost, once the most common argument against accessible design, is no longer a significant reason to deny access for all!

Thoughts on Costs versus Benefits

SELECTED DATA ON COST, NEEDS AND BENEFITS OF ACCESS FEATURES (Figure 5)

Access Feature	Cost of Each	Need Estimate' (Number of People)	Benefit Estimate' (Number of People)
Area of Refuge	$225	753,000	5,191,000
Signage	$90	1,741,000	8,750,000
Communications	$201	1,741,000	8,750,000
Detectable Warnings at Curb Ramp	$6	310,000	4,739,000
Ramp (includes edge protection)	$6,960	753,000	7,959,000
Handrails for Stairs	$104/story	4,075,000	18,782,331
Audible Signal for Elevators	$450/car	381,000	4,739,000
Raised Characters on Hoistway	$51/landing	381,000	4,739,000
Door Re-opening Device	$950/elevator	753,000	5,191,000
Tactile Control Indicators for Elevators	STD/No Cost	381,000	4,739,000
Grab Bars for Water Closet or Toilet Stall	$108/stall	753,000	8,954,187
Insulation of Lavatory Pipes	$19	753,000	11,324,412
Bathtub - Seat and Hand-held Shower	$235	1,208,000	11,324,412
Grab Bars for Bathtubs	$136	1,208,000	5,191,000

Thoughts on Costs versus Benefits

Access Feature	Cost of Each	Need Estimate' (Number of People)	Benefit Estimate' (Number of People)
Shower Stall - Seat and Hand-held Shower	$220	4,075,000	19,225,166
Grab Bars in Shower Stall	$78	753,000	88,954,187
Visual Alarm for Emergency Warning System	$169	10,491,000	1,086,000
Tactile Signage and Braille Characters or Symbols	$450/sign	381,000	1,686,000
Telephone			
Volume Control	free for pay phone	7,213,000	12,558,870
	$50/private	7,213,000	12,558,870
TDD	$349	1,741,000	8,559,000
Outlet for TDD	$60/phone	1,741,000	8,559,000
Assisted Listening System in Auditorium or Place of Assembly	$856/ 3 listeners	8,750,000	N/A

NOTES

1. The need estimate refers to the number of people for whom access is not possible or extremely difficult without the specified feature.

2. The benefit estimate refers to the number of people for whom access is possible without the specified feature, but for whom such a feature would make access much easier.

3. The need and benefit estimate numbers are deliberately conservative in order to retain an unduplicated count. The organization of categories of disability in the study is such that any one person may be counted in several groups. The numbers used in the chart represent the largest group of people who need or benefit from a particular feature.

SOURCES

For Cost Figures: *Regulatory Impact Analysis for Final ADA Guidelines for Buildings and Facilities,* U.S. Architectural & Transportation Barriers Compliance Board, October 10, 1991.

For Need/Benefit Estimates: *Persons Who Need or Benefit from Accessibility Features in the Built Environment,* Mitchell P. La Plante, Ph.D. and Leslie A. Grant, Ph.D., Institute for Health & Aging (San Francisco: University of California, April 1988).

ENDNOTES

1. Department of Justice, Civil Rights Division. *Preliminary Regulatory Impact Analysis of the Department of Justice Proposed Regulation Implementing Title III of the Americans with Disabilities Act* (February 14, 1991).

2. U.S. Architectural & Transportation Barriers Compliance Board. *Regulatory Impact Analysis for Final ADA Accessibility Guidelines for Buildings and Facilities (draft)* (October 10, 1991).

3. U.S. Department of Housing and Urban Development, Office of Policy Development and Research. *Barrier-free Site Design,* prepared by The American Society of Landscape Architects Foundation (1975)

4. Department of Justice, Civil Rights Division. *Preliminary Regulatory Impact Analysis of the Department of Justice Proposed Regulation Implementing Title III of the Americans with Disabilities Act* (February 14, 1991).

5. These priorities for barrier removal concur with those proposed by the Department of Justice in Section 36.304(r) Removal of Barriers: Priorities of Title III of ADA.

Appendix

APPENDIX I

EXCERPTS FROM THE OHIO REVISED CODE

175.13 Certain units for handicapped

The Ohio Housing Finance Agency shall require in housing projects assisted under Chapter 175 of the Revised Code, in which ten or more units are affected, that a sufficient number of units needed to meet the needs of handicapped in the housing market served by the project shall meet the American National Standards Institute standard A-117.1-1961 (R-1971), as amended. If any project consisting of twenty units or more uses state funds, in whole or in part, a minimum of one unit in each twenty shall meet the American National Standards Institute standard A-117.1-1961 (R-1971) as amended.

HISTORY: 1986 H 428, eff. 12-23-86
1986 H 325; 1983 H 291

3781.111 Regulations to facilitate access and use of buildings by handicapped persons; special parking locations for handicapped to be marked.

(A) In addition to the powers conferred by any other section of the Revised Code, the board of building standards shall adopt standards and rules to facilitate the reasonable access and use by all handicapped persons of all buildings and the facilities of buildings for which plans are submitted for approval under section 3791.04 of the Revised Code. No standard or rule shall be applied to any building the plans or drawings, specifications, and date of which have been approved prior to the time that the standard or rule takes effect.

(B) Except as otherwise provided in this section, the standards and rules adopted by the board pursuant to this section shall be in accordance with The Americans with Disabilities Act of 1990, 104 Stat. 327, 42 U.S.C.A. 12101, as amended, and The Fair Housing Amendments of 1988, 102 Stat. 1619, 42 U.S.C.A. 3601, as amended.

(C) All signs posted to designate special parking locations for handicapped persons in accordance with division E of section 4511.69 of the Revised Code and the standards and rules adopted pursuant to this section shall be mounted on a fixed or movable post or otherwise affixed in a vertical position at a height so that the sign is clearly visible to the driver of a vehicle when parked in such a location.

(D) As used in this section, "handicapped person" has the same meaning as in section 4112.01 of the Revised Code.

(E) No owner of a building or facility where special parking locations for handicapped persons must be designated in accordance with the standards and rules adopted pursuant to this section shall fail to properly mark the special parking locations as required by those standards and rules or fail to maintain the markings of the special parking locations, including the erection and maintenance of the fixed or moveable signs.

HISTORY: 1992 H 321, eff. 6-30-92
199 H 73; 1980 S 97; 1974 H 1; 1974 H 343; 1973 S 174; 132 vH 1; 131 vS 124

Excerpts from section 4112.01 (This section deals in part with the definition of the term "handicap.")

(A) As used in this chapter:

(13) "Handicap" means a physical or mental impairment that substantially limits one or more major life activities, including the functions of caring for one's self, performing manual tasks, walking, seeing, hearing, speaking, breathing, learning, and working; a record of a physical or mental impairment; or being regarded as having a physical or mental impairment.

(21) "Handicapped person" means a person with a handicap.

APPENDIX II

EXCERPTS FROM THE 1992 OHIO BASIC BUILDING CODE

SECTION 512.0 (4101:2-5-12) ACCESSIBILITY TO BUILDINGS AND FACILITIES

512.1 (4101:2-5-12) Where required: The provisions of this section shall apply to all buildings and the facilities of buildings pursuant to section 3781.111 of the Revised Code.

512.1.1 (4101:2-5-12) Deleted

512.1.2 (4101:2-5-12) Deleted

512.1.3 (4101:2-5-12) Deleted

512.1.4 (4101:2-5-12) Deleted

512.2 (4101:2-5-12) Accessible buildings and facilities: Unless otherwise specifically provided for herein, buildings and facilities shall comply with the Americans with Disabilities Act Accessibility Guidelines (ADAAG) listed in "Appendix A"

512.2.1 (4101:2-5-12) Covered multifamily dwellings: Access shall be provided to buildings with covered multifamily dwellings in accordance with the requirements of this section. Facilities, common and public use areas, and dwelling units in covered multifamily dwellings shall meet the requirements for access as specified by Sections 512.2.1.1 and 512.2.1.2.

512.2.1.1 (4101:2-5-12) Facilities, common and public use areas: Access shall be provided to facilities and common and public use areas in accordance with the Americans with Disabilities Act Accessibility Guidelines (ADAAG) listed in "Appendix A."

512.2.1.2 (4101:2-5-12) Dwelling units: Access shall be provided for dwelling units in accordance with the Fair Housing Accessibility Guidelines (FHAG) listed in "Appendix A."

512.3 (4101:2-5-12) Definitions: For the purposes of this section, the following terms and their meanings in the Americans with Disabilities Act Accessibility Guidelines and the Fair Housing Accessibility Guidelines listed in "Appendix A" are revised or added as follows:

Addition: See "Addition," Rule 4101:2-2-01 of the Administrative Code.

Administrative authority: See "Building official," Rule 4101:2-2-01 of the Administrative Code.

Alteration: See "Alteration," Rule 4101:2-2-01 of the Administrative Code.

Assembly area: See Rule 4101:2-3-02 of the Administrative Code.

Multifamily dwelling: see "Multifamily apartment house" and "Multiple single-family dwelling" listed under "dwellings" in Rule 4101:2-2-01 of the Administrative Code.

Occupiable: See "Occupied," Rule 4101:2-3-02 of the Administrative Code.

Primary function: A major activity for which the facility is intended. Areas that contain a primary function include, but are not limited to, the customer services lobby of a bank, the dining area of a cafeteria, the meeting rooms in a conference center, as well as offices and other work areas in which the activities of the public accommodation or other private entity using the facility are carried out. Mechanical rooms, boiler rooms, supply storage rooms, employee lounges or locker rooms, janitorial closets, entrances, corridors and restrooms are not areas containing a primary function.

Public entity: (1) Any state or local government; (2) any department, agency, special purpose district, or other instrumentality of Ohio or local government; and (3) the National Railroad Passenger Corporation, and any commuter authority (as defined in Section 103(8) of the Rail Passenger Service Act).

Story: See "Story," Rule 4101:2-2-01 of the Administrative Code.

512.4 (4101:2-5-12) Accessible buildings and facilities: For the purposes of this section, the Americans with Disabilities Act Accessibility Guidelines (ADAAG) listed in "Appendix A" is revised as follows:

1. ADAAG Section 4.1.3(5), exception 1, does not apply to public entities.
2. ADAAG Section 4.1.6(1)(c), delete without substitution.
3. ADAAG Section 4.1.6(2), add the following subsections:

4.1.6(2)(a) Alterations that affect the usability of or access to an area containing a primary function include, but are not limited to:

4.1.6(2)(a)(i) Remodeling merchandise display areas or employee work areas in a department store;
4.1.6(2)(a)(ii) Replacing an inaccessible floor surface in the customer service or employee work areas of a bank;
4.1.6(2)(a)(iii) Redesigning the assembly line area of a factory; or
4.1.6(2)(a)(iv) Installing a computer center in an accounting firm.

4.1.6(2)(b) For the purposes of this section, alterations to windows, hardware, controls, electrical outlets, and signage shall not be deemed to be alterations that affect the usability of or access to an area containing a primary function.

4.1.6(2)(c) When alterations are made only to a tenant space, the path of travel outside the tenant space unaffected by the alterations is not required to be made accessible.

4.1.6(2)(d) Path of travel.

4.1.6(2)(d)(i) A "path of travel" includes a continuous, unobstructed way of pedestrian passage by means of which the altered area may be approached, entered, and exited, and which connects the altered area with an exterior approach (including sidewalks, streets, and parking areas), an entrance to the facility, and other parts of the facility.
4.1.6(2)(d)(ii) An accessible path of travel may consist of walks and sidewalks, curb ramps and other interior or exterior pedestrian ramps; clear floor paths through lobbies, corridors, rooms, and other improved areas; parking access aisles; elevators and lifts; or a combination of these elements.
4.1.6(2)(d)(iii) For the purposes of this part, the term "path of travel" also includes the restrooms, telephones and drinking fountains serving the altered area.

512.4.1 (4101:2-5-12) Deleted.

HISTORY: eff. 2-1-93
1985-86 OMR 683; 1984-85 OMR 1379, 691

SECTION 816.0 (4101:2-8-16) RAMPS

816.1 Capacity: The capacity of a ramp used as a *means of egress* component shall be computed in accordance with Section 808.0.

816.2 Minimum dimensions: The minimum dimensions of *means of egress* ramps shall comply with Sections 816.2.1 through 816.2.3.

816.2.1 Width: The minimum width of a *means of egress* ramp shall not be less than that required for *corridors* by Section 810.3.

816.2.2 Headroom: The minimum headroom in all parts of the *means of egress* ramp shall not be less than 6 feet 8 inches (2,032 mm).

816.2.3 Restrictions: Means of egress ramps shall not reduce in width in the direction of egress travel. Projections into the required ramp and landing width are prohibited except for handrails and stringers. Doors opening onto a landing shall not reduce the clear width to less than 42 inches (1,067 mm).

816.3 (4101:2-8-16) Maximum slope: Except as required by Section 512.0, the maximum slope of means of egress ramps shall be one unit vertical in eight units horizontal (1:8).

816.4 (4101:2-8-16) Landings: Except as required by Section 512.0, ramp slopes of one unit vertical in twelve units horizontal (1:12) or steeper shall have landings at the top, bottom, all points of turning, entrance, exit and at doors but not less than at each twelve feet (3,658 mm) of vertical rise. The least dimension of a landing shall not be less than the required width of the ramp except that the landing dimension in the direction of travel is not required to exceed four feet (1,219 mm) where the travel from one ramp to the next ramps is a straight run.

816.5 (4101-2-8-16) Guards and handrails: Except as required by Section 512.0, guards shall be provided on both sides of the ramp and shall be constructed in accordance with Section 824.0. Handrails conforming to Section 825.0 shall be provided on at least one side of every ramp having a slope greater than one unit vertical in fifteen units horizontal (1:15). Ramps required by Section 512.0 for persons with physical handicaps shall have handrails on both sides of the ramp wherever the vertical rise between landings exceeds six inches (152 mm).

815.6 Ramp construction: Ramps used as an exit shall conform to the applicable requirements of Section 817.9 as to materials of construction and enclosure.

816.6.1 Surface: For all slopes exceeding one unit vertical in 12 units horizontal (1:12) and wherever the use is such as to involve danger of slipping, the ramp shall be surfaced with approved slip-resistant materials.

HISTORY: eff. 2-1-93

APPENDIX III

A BRIEF HISTORY OF EARLY ACCESS LEGISLATION

(excerpted from the second edition of *Access for All)*

Early Federal Legislation

Architectural Barriers Act of 1968
Public Law 90-480

This act, perhaps the most significant piece of federal legislation, was passed in August 1968, as an act "to ensure that buildings that are financed with federal funds are designed and constructed to be accessible to the handicapped." This public law required any building constructed in whole or part with federal funds to be made accessible to and usable by people with disabilities. This law pertained to new or remodeled structures or leased structures. It did not apply to privately-owned residential structures or any buildings or facilities on military installations designed and constructed primarily for use by military personnel.

In 1970 and 1976, amendments which addressed barrier-free mass transportation and certain language changes were added. They also gave federal agencies, named Administrators of the Act, a clear statutory mandate to: 1) prescribe design standards for the construction and alteration of buildings and facilities within their jurisdictions, and 2) establish a system of continuing survey and investigation to ensure compliance with standards which have been prescribed for accessibility. The administrators included the General Services Administration, the Department of Housing and Urban Development, the Department of Defense, and the U.S. Postal Service.

Rehabilitation Act of 1973
Public Law 93-112

This monumental piece of legislation directly and indirectly affects architectural barriers. Section 501 established an Interagency Committee on Handicapped Employees within the federal government. The committee was created to provide a focus for federal employment of disabled individuals. It also provides a periodic review of the adequacy of hiring, placement and advancement of people with disabilities by each department and agency of the government to ensure that their special needs are being met. This section also requires each department and agency to submit to the Civil Service Commission an affirmative action program plan for hiring, placement and advancement of people with disabilities.

The Architectural and Transportation Barriers Compliance Board (ATBCB) was established by Section 502 to ensure compliance with the standards prescribed by the General Services Administration, the Department of Defense, the U.S. Postal Service and the Department of Housing and Urban Development.

In 1978 an amendment to Section 502 added the responsibility of issuing minimum guidelines and requirements for the standards established by the four standard-setting agencies to ATBCB's functions.

Section 503, "Employment Under Federal Contracts," is frequently referred to as "Affirmative Action to Employ Handicapped People." It requires all employers who have contracts or subcontracts of $2,500 or more with the federal government to take affirmative action to employ and advance in employment "qualified handicapped persons." In the federal regulations issued by the Department of Labor, effective May 16, 1976, employers are required to make reasonable accommodations to the physical and mental

limitations of applicants or employees with disabilities, unless the contractor can show that such accommodations would create an undue hardship on the business. Such accommodations may include: 1) access to the facility; 2) job restructuring; and 3) modification of equipment or devices.

Section 504, "Nondiscrimination Under Federal Grants," states that "no handicapped individual shall, solely by reason of his handicap, be excluded from the participation in any program or activity receiving federal financial assistance." The federal regulations issued by the Department of Health, Education and Welfare pertain to employment practices, program accessibility and architectural accessibility. Facilities are also required to make reasonable accommodations to the physical and mental limitations of applicants or employees with disabilities. In addition, recipients of federal financial assistance must eliminate physical obstacles so that the program or activity, when viewed in its entirety, is readily accessible to people with disabilities. All newly-constructed facilities must be accessible and usable by people with disabilities. Structural changes in existing facilities must be made within three years if there is no other way of assuring program accessibility.

The spirit of this federal legislation requires the elimination of architectural barriers in order to provide reasonable access for qualified applicants, employees and participants with disabilities.

Housing and Community Development Act of 1974
Public Law 93-383

This law contains two sections which impact people with disabilities. Title I, Section 104. a4a, deals with the application and review requirements which must be met before a grant will be given by the Department of Housing and Urban Development. It states, "no grant may be made unless an application shall have been submitted in which the applicant accurately surveys the condition of the housing stock in the community and assesses the housing assistance needs of lower-income persons (including elderly and handicapped persons)..."

The second section, Title I, 105.a5, deals with programs which are eligible for assistance, and states "a community development program assisted under this title may include special projects directed to the removal of material and architectural barriers which restrict the mobility and accessibility of elderly and handicapped persons."

Early State Legislation-Ohio

Section 3781.111

The first statute in Ohio originated with Senate Bill 124, effective November 4, 1965. It was amended by House Bill 343, effective September 26, 1974. These laws were incorporated into Section 3781.111 of the Ohio Revised Code. The Ohio law states that all public buildings and facilities must "facilitate the reasonable access and use by all handicapped persons..." Public building is defined as any building owned by the state or any political subdivision which is open to and used by the public. Facilities include, but are not limited to toilets, toilet rooms, dining areas, drinking fountains, public phone booths, lodging rooms or quarters for transient guests. Ohio law also requires ten percent of the units of newly-constructed lodging facilities which are built with public funds to be accessible in buildings subject to this law.

Senate Bill 162

This bill, which became effective July 23, 1976, contains a number of sections which directly or indirectly affect accessibility. Most notably, this bill added the term "handicap" to the provisions of Ohio's civil rights law. Section 4112.02 of the Ohio Revised Code states that it is "unlawful for an employer to discriminate against applicants or employees on the basis of handicap." The discrimination guidelines for this section, which were issued by the Ohio Civil Rights Commission on September 15, 1976, require employers to "make reasonable accommodation to the handicaps of an employee or applicant unless the employer can demonstrate that such an accommodation would impose an undue hardship on the conduct of the employer's business." Accessibility is included in the definition of reasonable accommodation.

The issue of housing was also addressed in Senate Bill 162. It prohibits discrimination on the basis of disability in multi-family housing. In regard to accessibility, Sections 128.22 and 3735.02 of the Ohio Revised Code state that housing projects of ten or more units which receive financial assistance from the Ohio Development Board must ensure that a sufficient number of the units (at least 1 in 20) meet the needs of people with disabilities. Such units must be accessible according to the American National Standards Institute (ANSI) standards, A.117.1-1961 , as amended. All metropolitan housing projects constructed with state funds must have at least one in 20 accessible units.

Senate Bill 162 also requires public accommodations such as inns, restaurants, theaters, stores and amusement sites to be accessible. This bill states that it is unlawful for managers, proprietors and employers of these facilities to discriminate or deny, on the basis of disability, "the full enjoyment of the accommodation."

Senate Bill 85

Ohio law, enacted by Senate Bill 85, requires all new or reconstructed curbs authorized by any municipal corporation or township after August 21, 1975, to have a ramp at each pedestrian crosswalk. Ramps must have a non-slip surface and be at least 40 inches wide.

The Development of Accessible Design Standards

Early Design Standards - ANSI A117.1-1961

In 1961, the American Standards Association, (now the American National Standards Institute), published the first design standard on accessibility, *Specifications for Making Buildings and Facilities Accessible to, and Usable by, the Physically Handicapped,* (ANSI A117.1-1961). The information in this book was based upon the research completed in the 1960s by Dr. Timothy Nugent at the University of Illinois. His recommendations were studied during the 1960s by state and federal agencies and used as the basis for adopting accessibility requirements in building codes and construction regulations.

The 1961 ANSI technical specifications were the first design regulations which attempted to create a standard based on the way people with disabilities function, and were adopted by states and building officials for use in codes and building regulations. By today's standards they were extremely narrow in scope, with no provision for some types of disabilities, and no specifications for housing. As a result, local jurisdictions saw a need to add and change certain provisions.

Revisions to ANSI A117.1

By the mid-1970s, there were approximately 65 different codes and regulations for accessible design in the United States, most requiring widely differing solutions to similar accessibility problems. These compliance and code enforcement problems prevented manufacturers from producing products that could meet such incongruous standards. As a result, people with disabilities and the building industry began to lobby for more uniformity.

The Department of Housing and Urban Development agreed to fund research which would evaluate and revise the 1961 standards. Their goal was to expand the standard's coverage of different types of disabilities and building components, and add specifications for housing. The new standards, based on extensive research by Edward Steinfeld, as associate professor of Architecture at the University of New York at Buffalo, were published in 1980. ANSI A117.1 (1980) was subsequently adopted by several state building codes, including the Ohio Basic Building Code (OBBC) and revised in 1986.

UFAS

In 1984, the ANSI (1980) technical specifications were largely incorporated into the new Uniform Federal Accessibility Standards (UFAS), which remains the standard for all federally-funded construction subject to the Architectural Barriers Act.

In 1985 and 1986, further refinements and revisions were made to both ANSI A117.1 and UFAS. The goal of these revisions was to increase uniformity in access requirements between federal and private sector construction systems. Since 1980, some version of the ANSI A117.1 standard has been adopted and incorporated into the majority of state building codes.

APPENDIX IV

INTERNATIONAL SYMBOL OF ACCESS

Some of the information in this section is excerpted from "People Are Asking About...Displaying the Symbol of Access," by the former President's Committee on Employment of the Handicapped and the National Easter Seal Society, and is used by permission.

The International Symbol of Access was adopted in 1969 by Rehabilitation International at its 11th World Congress on Rehabilitation of the Disabled. Rehabilitation International is a federation of national and international organizations providing rehabilitation services for people with disabilities in more than 60 countries.

The worldwide symbol identifies buildings or facilities which are accessible and can be entered and used by people with disabilities.

To use this symbol for reasons other than to denote an accessible building or facility is prohibited

The following is a list of design parameters for use of the International Symbol of Access.

Design

The symbol of access is composed of two elements — the wheelchair figure, and either a square background or a square border. The symbol of access is not correct unless it combines both elements.

The background size within the square border must equal the size of the square background without the border.

The width of the border on the square background must be equal to the vertical stroke width of the wheelchair figure.

Color
The correct color for the symbol of accessibility is similar to the blue used on international road signs indicating hospitals and parking. This blue should be the background color for the white design when used without a border, or as the color for the border and design on a white background.

Extraneous Elements
At no time should any other element be introduced into the symbol of access. The only possible exception could be a full width red diagonal slash from upper left to lower right as used on international road signs to indicate "not accessible." The width of the diagonal slash should be twice the vertical stroke width of the lines of the symbol.

Direction
The symbol must always face towards the right unless used in a directional sign indicating to the left. If the symbol of access is used within the confines of a rectangle, such as a license plate, it should be located on the left side facing towards the center.

Size and Visibility
The outer dimensions of the square background should be 2-1/2 inches (65 mm) square for indoor applications with a visibility requirement of up to 30 feet (9 M). The outer dimensions should be 4-1/2 inches (115 mm) square for indoor applications with visibility requirements greater than 25 feet (7.5 M) and outdoor applications up to 60 feet (18 M). For applications where the visibility requirements exceed 60 feet (18 M) the outer dimensions should be 8 inches (205 mm) square.

Location
The location of the symbol of access should be carefully considered. The symbol should be placed at or near the eye level of a person using a wheelchair, that is about 40 to 50 inches (1,015-1,270 mm) high. Such signs should be located where they can be easily viewed by people who are looking for them upon entering a site or building. Another important consideration is minimizing the potential for obstructions which hinder views of the sign.

Supplementary Information
Directional arrows or verbal messages may be located vertically or horizontally in adjacent square or rectangular areas with one dimension equal to that of the symbol of access.

Use of the International Symbol of Access on Vehicles
Sections 4503.41, 4503.44, and 4503.99 of the Ohio Revised Code contain regulations for use of the International Symbol of Access on vehicular license plates. A summary of this legislation follows:

1) A "handicapped person" is defined as any person who has lost the use of one or both legs, one or both arms, is blind or deaf, or who is so severely disabled as to be unable to move about without the aid of crutches or a wheelchair, or whose mobility is restricted by a permanent cardiovascular, pulmonary or other handicapped condition.

2) People with disabilities who are owners of motor vehicles may apply for and receive a set of license plates which are imprinted with the International Symbol of Access.

3) Motor vehicles owned by someone without a disability, but which have been modified for use by, are operated regularly by, or are used for the transportation of a person with a disability, are also eligible for registration under Section 4503.44. Standard plates with a parking card to be displayed when the vehicle is operated by or transporting a person with a disability will be issued for such vehicles.

4) Handicapped persons must present satisfactory evidence of disability in the form of a signed statement from the applicant's personal physician or documentary evidence of vehicle modifications.

5) Handicapped persons must pay the regular and normal taxes, charges and fees for these plates.

6) Guidelines and prohibitions for the use of the parking card are provided.

7) Violation of this section is a misdemeanor of the 4th degree.

Section 4503.44 - Reserved and Special Plates: plates for veterans with disabilities will be red, white and blue, will be inscribed "veteran" and imprinted with the International Symbol of Access.

"Disabled veterans who, because of a service-connected disability, are awarded funds for the purchase of a motor vehicle under the Disabled Veterans and Servicemen's Automobile Assistance Act of 1970 may apply to the Registrar of Motor Vehicles for registration without payment of any registration and service fee and without payment of county or municipal motor vehicle tax."

BIBLIOGRAPHY

Abercrombie, Stanley, ed. "On Sutton Place ," *Interior Design* (February 1989): pp. 274-277.

Alpern, Andrew, AIA et al. eds. *Handbook of Specialty Elements in Architecture.* New York: McGraw-Hill Book Company, 1982.

The American Society of Landscape Architects. *Barrier-free Site Design.* Prepared for the United States Department of Housing and Urban Development, Office of Policy Development and Research. April 1975.

ANSI Board of Standards Review. *American National Standard for Buildings and Facilities — Providing Accessibility and Usability for Physically Handicapped People.* Compiled in conjunction with the National Easter Seal Society, President's Committee on Employment of the Handicapped and U.S. Department of Housing and Urban Development. New York: American National Standards Institute, 1986.

Anton, Frank, ed. "Making U.S. Homes Accessible to All," *Builder* (January 1986): pp. 59-64.

Ballantyne, Duncan S., project director. *Accommodation of Handicapped Visitors at Historic Sites - Volume I GUIDE.* Prepared for the U.S. Department of the Interior, National Park Service by Harold Russell Associates, Inc. in cooperation with the Administrative and Technical Staff of the Denver Service Center and Washington office of the National Park Service. October 1979.

Banks-Baldwin Law Publishing Company, compilers. *Baldwin's Ohio Revised Code Annotated.* Title 37: Health, Safety, Morals. 1992.

Bostrom, James A., Mace, Ronald L., AIA and Long, Maria. *Adaptable Housing - Marketable Accessible Housing for Everyone.* Designed and produced for U.S. Department of Housing and Urban Development, Office of Policy Development and Research by Barrier Free Environments, Inc. Washington, DC: 1987.

Bowe, Frank. *Demography and Disability: A Chartbook for Rehabilitation.* Published jointly by the Arkansas Rehabilitation Research and Training Center, University of Arkansas and Arkansas Rehabilitation Services.

Brenner, Douglas. "On Their Own — Together," *Architectural Record* (November 1988): pp. 110-113.

Building Officials & Code Administrators International, Inc. *The 1989 Ohio Basic Building Code (OBBC).* Country Club Hills, Illinois: Building Officials and Code Administrators, International, Inc., second update printing, August 1990.

Building Owners and Managers Association International. *BOMA International's ADA Compliance Guidebook — A Checklist for Your Building.* Washington, DC: Building Owners and Managers Association International, 1991.

The *ADA Compliance Guidebook* is available from:
BOMA International
1201 New York Avenue, NW
Suite 300
Washington, DC 20005
(202) 408-2662

4) Handicapped persons must present satisfactory evidence of disability in the form of a signed statement from the applicant's personal physician or documentary evidence of vehicle modifications.

5) Handicapped persons must pay the regular and normal taxes, charges and fees for these plates.

6) Guidelines and prohibitions for the use of the parking card are provided.

7) Violation of this section is a misdemeanor of the 4th degree.

Section 4503.44 - Reserved and Special Plates: plates for veterans with disabilities will be red, white and blue, will be inscribed "veteran" and imprinted with the International Symbol of Access.

"Disabled veterans who, because of a service-connected disability, are awarded funds for the purchase of a motor vehicle under the Disabled Veterans and Servicemen's Automobile Assistance Act of 1970 may apply to the Registrar of Motor Vehicles for registration without payment of any registration and service fee and without payment of county or municipal motor vehicle tax."

BIBLIOGRAPHY

Abercrombie, Stanley, ed. On Sutton Place ," *Interior Design* (February 1989): pp. 274-277.

Alpern, Andrew, AIA et al. eds. *Handbook of Specialty Elements in Architecture.* New York: McGraw-Hill Book Company, 1982.

The American Society of Landscape Architects. *Barrier-free Site Design.* Prepared for the United States Department of Housing and Urban Development, Office of Policy Development and Research. April 1975.

ANSI Board of Standards Review. *American National Standard for Buildings and Facilities — Providing Accessibility and Usability for Physically Handicapped People.* Compiled in conjunction with the National Easter Seal Society, President's Committee on Employment of the Handicapped and U.S. Department of Housing and Urban Development. New York: American National Standards Institute, 1986.

Anton, Frank, ed. "Making U.S. Homes Accessible to All," *Builder* (January 1986): pp. 59-64.

Ballantyne, Duncan S., project director. *Accommodation of Handicapped Visitors at Historic Sites - Volume I GUIDE.* Prepared for the U.S. Department of the Interior, National Park Service by Harold Russell Associates, Inc. in cooperation with the Administrative and Technical Staff of the Denver Service Center and Washington office of the National Park Service. October 1979.

Banks-Baldwin Law Publishing Company, compilers. *Baldwin's Ohio Revised Code Annotated.* Title 37: Health, Safety, Morals. 1992.

Bostrom, James A., Mace, Ronald L., AIA and Long, Maria. *Adaptable Housing - Marketable Accessible Housing for Everyone.* Designed and produced for U.S. Department of Housing and Urban Development, Office of Policy Development and Research by Barrier Free Environments, Inc. Washington, DC: 1987.

Bowe, Frank. *Demography and Disability: A Chartbook for Rehabilitation.* Published jointly by the Arkansas Rehabilitation Research and Training Center, University of Arkansas and Arkansas Rehabilitation Services.

Brenner, Douglas. "On Their Own — Together," *Architectural Record* (November 1988): pp. 110-113.

Building Officials & Code Administrators International, Inc. *The 1989 Ohio Basic Building Code (OBBC).* Country Club Hills, Illinois: Building Officials and Code Administrators, International, Inc., second update printing, August 1990.

Building Owners and Managers Association International. *BOMA International's ADA Compliance Guidebook — A Checklist for Your Building.* Washington, DC: Building Owners and Managers Association International, 1991.

The *ADA Compliance Guidebook* is available from:
BOMA International
1201 New York Avenue, NW
Suite 300
Washington, DC 20005
(202) 408-2662

Bunin, Nina M., project director. A *Guide to Designing Accessible Outdoor Recreation Facilities.* Prepared by U.S. Department of the Interior, Heritage Conservation and Recreation Service, Lake Central Regional Office. Ann Arbor: January 1980.

Clark, Sam. "Accessible Kitchen Remodel," *Fine Homebuilding* (October/November 1986): pp. 43-45.

Commonwealth of Massachusetts. *Access Improvements Workbook - Help for Facility Managers in Preparing Capital Budget Requests.* Prepared for Division of Capital Planning and Operations, Executive Office for Administration and Finance, and Office of Handicapped Affairs by Adaptive Environments Center and Welch + Epp Associates. June 1988.

Comptroller General of the United States. "Further Action Needed to Make All Public Buildings Accessible to the Physically Handicapped," *Report to Congress* (July 15, 1975).

Davies, Thomas D. Jr., AIA and Beasley, Kim A., AIA. *Design for Hospitality — Planning for Accessible Hotels & Motels.* Developed by the Paralyzed Veterans of America with the assistance of the American Hotel & Motel Association. New York: Nichols Publishing, 1988.

General Services Administration, Department of Defense, Department of Housing and Urban Development, U.S. Postal Service. *Uniform Federal Accessibility Standards.* Washington, DC: April 1, 1988.

Goldman, Charles D. "Accessibility: The Evolution Continues," *The Construction Specifier* (February 1988): pp. 50-53.

Kraus, Lewis E. and Stoddard, Susan, Ph.D. *Chartbook on Disability in the United States.* Prepared for the U.S. Department of Education by InfoUse. Washington, DC: National Institute on Disability and Rehabilitation Research, March 1989.

Louis Harris and Associates, Inc. *The ICD Survey 11: Employing Disabled Americans.* Conducted for the International Center for the Disabled (ICD) in cooperation with the National Council on the Handicapped and The President's Committee on Employment of the Handicapped. New York: Louis Harris and Associates, Inc., 1987.

Loversidge, Robert D., Jr., ed. *The Ohio Historic Inventory Manual.* Columbus: Ohio Historical Society, 1976.

Mace, Ronald L., FAIA. *The Accessible Housing Design File.* Prepared in part with funds from the United States National Institute on Disability and Rehabilitation Research by Barrier Free Environments, Inc. New York: Van Nostrand Reinhold, 1991.

Muller, James. *Accommodating the Disabled Student.* Written for The Job Development Laboratory, The George Washington University Rehabilitation Research and Training Center. Washington, DC: 1981.

National Easter Seal Society for Crippled Children and Adults. "People are Asking About...Displaying the Symbol of Access." Chicago.

Panero, Julius, AIA, ASID, and Zelnik, Martin, AIA, ASID. *Human Dimension & Interior Space - A Source Book of Design Reference Standards.* New York: Whitney Library of Design, 1979.

Parker, Rosetta E., CPM. *Housing for the Elderly - The Handbook for Managers.* Chicago: Institute of Real Estate Management of the National Association of Realtors, 1984.

Parrott, Charles. *Access to Historic Buildings for the Disabled: Suggestions for Planning and Implementation.* TPS report prepared for U.S. Department of the Interior, Heritage Conservation and Recreation Service, Technical Preservation Services Division. Heritage Conservation and Recreation Service Publication Number 46. Washington, DC: April 1980.

Raeber, John A. "Complying with Accessibility Codes," *The Construction Specifier* (February 1988): pp. 44-49.

Raeber, John A. "Federal Accessibility," *The Construction Specifier* (August 1991): pp. 82-89.

Ramsey, Charles George and Sleeper, Harold Reeve. *Architectural Graphic Standards.* Prepared for the American Institute of Architects, John Ray Hoke, Jr., AIA, editor. New York: John Wiley & Sons, 1988.

Regnier, Victor, AIA and Pynoos, Jon, Ph.D. *Housing the Aged - Design Directives and Policy Considerations.* New York: Elsevier Science Publishing Co. Inc., 1987.

Rigger, Ralph. "A Barrier-Free House - Accommodating a Wheelchair Calls for Careful Planning Inside and Out," *Fine Homebuilding* (April/May 1989): pp. 67-71.

Robinette, Gary 0., ASLA. *Barrier-free Exterior Design: Anyone Can Go Anywhere.* New York: Van Nostrand Reinhold Company Inc., 1985.

Rouda, Mitchell B., ed. "How to Deal with New Fair Housing Rules," *Builder* (June 1989): pp. 56-60.

Simmons, Edward, principal analyst. *Ohio Population and Housing Characteristics by Governmental Unit: 1990.* Prepared by Ohio Data Users Center, Ohio Department of Development. Columbus: June 1991.

Singer, Len D., ed. A *Bathroom for the Elderly - Aging Factors, Design Evaluation Criteria and a Design Proposal.* Prepared for American Standard and the Center for Innovative Technology by the Center for Product and Environmental Design and the College of Architecture and Urban Studies, Virginia Polytechnic Institute and State University. Blacksburg, Virginia: March 1988.

Sokolnicki, Jan. "Update on Accessibility Requirements," *Code News - A Journal on Building Construction Law and Code Enforcement in Ohio* (July/August 1991): pp. 65-69.

State University of New York. *Making Facilities Accessible to the Physically Handicapped.* New York: State University Construction Fund, July 1967.

Steinfeld, Edward. "Designing Adaptable Housing to Meet Barrier-free Goals," *Architectural Record* (March 1980): pp. 57-65.

Tetlow, Karen. "Compassionate Design," *Interiors* (December 1989): pp. 82-93.

U.S. Architectural & Transportation Barriers Compliance Board. *Regulatory Impact Analysis for Final ADA Accessibility Guidelines for Buildings and Facilities (draft).* October 10, 1991.

U.S. Department of Health, Education and Welfare, Office of Research and Statistics, Social Security Administration. *Disability in the United States: A Chartbook.* 1977.

U.S. Department of Housing and Urban Development, Office of the Assistant Secretary for Fair Housing and Equal Opportunity. *Federal Register.* Final Fair Housing Accessibility Guidelines. Vol. 56, No. 44 (Wednesday, March 6, 1991): pp. 9472-9514.

U.S. Department of Justice, Office of the Attorney General. *Federal Register.* Nondiscrimination on the Basis of Disability in State and Local Government Services; Final Rule. Vol. 56, No. 144 (Friday, 26 July, 1991): pp. 35716-35723 for Title II: pp. 35544-35691 for Title III.

U.S. Department of Justice, Civil Rights Division. *Preliminary Regulatory Impact Analysis of the Department of Justice: Proposed Regulation Implementing Title III of the Americans with Disabilities Act of 1990.* Prepared in consultation with Dr. Gregory S. Crespi. February 14, 1991.

Valins, Martin. *Housing for Elderly People: A Guide for Architects, Interior Designers and Their Clients.* New York: Van Nostrand Reinhold Company, Inc., 1988.

Webb, William A. "Rights of Passage," *The Construction Specifier* (August 1991): pp. 91-95.

INDEX

Access aisle, *see Parking, access aisle*
Accessible routes, 50, 83, 86-89, 128, 129, 136, 165, 168, 174, 177, 179, 184, 203, 217, 219
Accessories, toilet, 106, 112, 217, 229
residential, 152
Activity limitations, 13, 48
Aging, 6, 11, 14, 15, 16, 126, 127, 165, 169, 175, 179, 233
statistics - national, 24
statistics - Ohio, 22, 25
Airports, 194
Alternative accommodations, 36, 202, 219, 221-23
American Sign Language, *see Visual communication*
American National Standards Institute (ANSI), 32, 37, 38, 42, 62, 66, 126, 238, 245-46
Americans with Disabilities Act (ADA), 30, 34-39, 113, 162, 170, 176, 179, 194, 195, 196, 197, 200, 201, 202, 229, 230
ADAAG, 34-39, 42, 62, 66, 68, 80, 84, 85, 86, 88, 89, 90, 91, 92, 96, 98, 99, 100, 103, 108, 109, 110, 111, 112, 114, 116, 118, 119, 122, 123, 162, 163, 170, 175, 178, 179, 180, 182, 197, 207, 216, 219, 221, 222, 223, 227, 229
Title I, 34, 196
Title II, 34, 35, 194, 195
Title III, 34, 35, 36, 195, 196
Title IV, 34
Title V, 34
Architectural Barriers Act (1968), *see Legislation*
Areas of assembly, 162, 163-65, 168, 170, 181, 184, 193
Areas of rescue assistance, 89, 230, 234
Architectural and Transportation Barriers Compliance Board (ATBCB), 31, 227, 233, 243
Art galleries, 169
Artificial limbs, 18
ASME AI 7.1 Safety Code for Elevators and Escalators, 94, 103, 104, 105
Assistive listening systems/devices, *see Communication aids*
Audial impairments, *see Hearing limitations*
Auditoriums, 162, 163, 227
Auxiliary aids, 36
also see Communication aids
Barrier removal, 6, 35, 36, 200-2, 220, 229, 230
Bathrooms, *see Toilet rooms*
Bathtubs, 134, 152, 234
Bedrooms, 129, 134, 148-50, 156
Benches
outdoor, 72-73, 192
indoor, 185
Benefits of accessible design, 230-35
Board of Building Standards, Ohio, 32, 39, 238
Boating, 191
BOCA model building code, 32
Braces, 18, 87, 92, 105, 163,164, 212
Braille, 99, 100, 123, 172, 174, 177, 189, 223, 228, 235
Building codes, 31, 65, 94, 245, 246
model building codes, 32, 38, 39
Building entrances, 50, 51, 52, 53, 55, 79, 81, 86, 126, 128, 136, 186, 201, 203-6, 214, 228
Buses, 194, 195
Business and mercantile facilities, 35, 162, 185-86
Cafeterias, 182-83
Camping, 188
Canes, long (for people with visual impairments), 18, 54, 58, 86, 87, 155, 173, 189
clearances, 44
Canes, support, 18, 54, 58, 86, 87, 155, 189
Carpets, 83, 87, 88
Children, 14, 42, 43, 44, 45, 46, 79, 91, 116, 122, 170, 171, 173, 187
Cinemas, 163, 227, 232
Civil Rights Act of 1968 *(see Legislation)*
Clear floor space, 46, 47, 73, 134, 140, 141, 144, 148, 151, 165, 166, 171, 174, 175, 182, 218
drinking fountains, 118, 218
telephones, 120
toilet rooms, 106, 107, 110, 111, 114, 132, 133, 134, 217
turning, 47, 107, 130, 131, 132, 135, 137, 148, 168, 175, 179, 185
Closets, *see Storage*
Cognitive limitations, 11, 12, 16, 17, 48, 170, 176, 197, 233
Commercial facilities, 35, 36
Communication aids, 20, 89, 166, 234
assistive listening devices (ALS), 164, 235
closed caption decoders, 174, 176, 180
TDDs, 34, 119, 120, 134, 149, 156, 176, 180, 218, 235
Communication barriers, 36
Controls, miscellaneous, 116, 121, 135, 149, 152, 153, 174, 176, 177, 179, 218
Convenience outlets, see *Electrical outlets*

Cooking
indoor, 139-42
outdoor, 188
also see Kitchens
Coordination limitations, 13, 14
Corridors, hallways, 79, 86, 204, 206
residential, 129, 136
Costs, 226-30
barrier removal, 201, 202, 229
indirect, 230
new construction, 226, 227, 228, 230, 232-35
remodeling, 229
Crutches, 18, 19, 43, 54, 58, 86, 164, 172, 184, 212
Curb ramps, 52-60, 127, 203, 230, 234, 245
Detectable warnings, 59, 92, 230, 234
Disability, definitions of, 10
Disability statistics
national, 22, 24, 231, 232, 234, 235
Ohio, 25, 26
Dog guides, 19, 20, 43, 81, 104
Door mats, 87
Doors and doorways, 64, 79, 80-85, 86, 106, 108, 114, 122, 123, 124, 168, 175, 185, 215
fire, 84
hardware, 68, 85, 108, 209, 229
maneuvering clearances, 82, 128, 208
power-activated, 79, 84, 211
renovation, 200, 204, 205, 206, 207-9, 217, 227, 229
residential, 126, 128, 129, 132, 134, 135, 136, 148, 156
also see Kick plates, Thresholds and Vestibules
Dormitories, *see Bedrooms*
Drinking fountains, 79, 116, 117, 200, 218, 229, 241
Drop-off zones, 51, 79, 203
Educational facilities, 162, 170-74
Elderly persons, *see Aging*
Electrical outlets, 119, 135, 149, 150, 170, 176, 180, 235
Elevators, 79, 86, 89, 94-102, 126, 202, 204, 206, 212, 214, 221, 228, 234
Elevator inspections, division of, 103
Elevator code, *see ASME A 17.1*
Employment
places of, 196-98
Title I of ADA, 34, 35, 196
Entrances, building, *see Building entrances*
Entrances, site, *see Site entrances*
Environmental barriers, 2-7
Environmental sensitivities, 17
Equipment modifications, *see Worksite modifications*
Escalators, 104
Exit ways
exterior, site, 65
interior, 86, 88, 89, 164, 208
Federal Fair Housing Amendments Act of 1988 (FHAA), 33, 34, 37, 126, 127, 128, 129, 130, 131, 132, 133, 134, 135, 160
Financial institutions, 162, 177
Fire alarms, 122, 135, 156, 174, 180, 218, 229, 235
Fire extinguishers, 122
Fishing, 191
Floor coverings, *see Carpets and Floor surfaces/textures*
Floor surfaces/textures, 83, 86, 87, 88, 101, 114, 156, 170, 229
Functional limitations, 2, 10, 11, 12, 24, 233
Furniture
indoor, 148-50, 171
outdoor, 72, 73
Garages, 179
residential, 157-58
Gates
exterior, 68
traffic control and turnstiles, 168, 185, 194
Grab bars, 108, 109, 111, 113, 114, 115, 133, 134, 151, 152, 153, 215, 229, 233, 234, 235
Grade changes, 51, 52, 61, 65, 128, 204
Gradient, 57, 58, 61
Gratings (grates), 58, 62, 86, 91
Handicapped, 10
Handrails, 233, 234
indoor, 90, 91, 93, 102, 202, 214
outdoor, 58, 62, 66, 67, 191, 192, 193, 205, 213
residential, 134
Health-care facilities, 35, 162, 175-176
Hearing aids, *see Communication aids*
Hearing limitations, 16, 48, 100, 119, 136, 165, 166, 169, 170, 174, 176, 180, 183, 189, 192, 197, 201, 218, 223
statistics, 25, 26
Historic preservation, 37, 219-23
Hoover canes, *see Canes, long*
Hospitals, *see Health-care facilities*
Hotels and motels, 35, 162, 178-81, 227
House Bill 321 (Ohio), *see Legislation*
Housing
adaptable, 126-136
design, 126-60, 170
fully-accessible, 136-60
legislation, 31, 33, 238, 244, 245
Illumination, *see Light levels*

Impairments, *see Activity limitations, Cognitive limitations, Coordination limitations, Functional limitations, Hearing limitations, Mobility limitations, Reach limitations, Temporary limitations, Thermal and tactile sensitivity limitations, and Visual impairments*
Income tax deductions, 39
International Symbol of Access, 51, 53, 55, 56, 80, 124, 238, 247-49
Interpretive trails, 189
Kick plates, 83, 209
Kitchens, 198
residential, 129, 131, 136-47, 180
Knee space, *see Vertical clearances*
Laundry, 148, 160
Lavatories and sinks, 106, 110, 111, 112, 173, 216
kitchen, 142, 143
residential, 133, 153, 234
Lecture halls, 163, 164, 165, 168
Legislation
Architectural Barriers Act (1968), 31, 243, 246
civil rights, 31, 33, 34
Civil Rights Act of 1968, 33, 34
Federal, 31-39, 243-44, 246
Ohio House Bill 321 (1992), 38, 39
Rehabilitation Act of 1973, 34, 243
state, 31, 33, 39
State of Ohio, 31-32, 34, 38, 39, 244-45
Lettering styles, *see Signage*
Level changes, 79, 90, 130, 206, 210
Levers, 68, 85
Libraries, 35, 162, 166-68, 170
License plates, 248-49
Lighting levels
indoor, 101, 112, 167, 168, 169, 197
outdoor, 66, 74, 75
residential, 129, 156, 158
Light switches, 116, 118, 218
residential, 129, 135, 149, 156, 158
Lip reading, *see Visual communication*
Living/dining areas, 130, 136, 137, 144, 156
Means of egress, *see Exit ways*
Mechanical aids, *see Mobility aids*
Medical care facilities, *see Health-care facilities*
Mental retardation, *see Cognitive limitations*
Mobility aids, 18, 19, 54, 174, 184, 193, 197
Mobility limitations, 12, 104, 175, 176, 180, 187, 194, 219, 233
Museums, 162, 169, 170, 221
National Council on Disabilities, 34
National Institute on Disability and Rehabilitation Research, 2
Normal age changes, 11
Offices, 196-97, 227
Ohio Basic Building Code (OBBC), 32, 38, 39, 240-42, 246
Parking, 51, 53, 54-55, 79, 128, 179, 184, 186, 193, 201, 203, 204, 238, 239, 241
access aisle, 51, 54, 55
van accessible, 54, 55, 203
universal design, 55
Passenger loading zones, *see Drop-off zones*
Personal care assistants, 20, 147
Plants, plantings, *see Vegetation*
Playgrounds, 187
Picnicking, 188
Post offices, 162, 177
Power ramps, *see Ramps, power*
Power walks, *see Walks, power*
Priorities for barrier removal, 36, 201, 230
Private clubs, 39
Prosthetic devices, 18
Protruding objects, 88, 107, 218
Public accommodations, 32, 35-37, 162-98, 200, 201, 202, 226, 229, 230, 233
Public transportation, 50, 53, 54, 79, 127, 194, 195, 201, 203
Ramps, 200, 233, 234, 242
interior, 86, 90, 91, 130, 164, 182, 202, 205, 206, 212
outdoor, 57, 61-64, 72, 74, 90, 184, 187, 190, 192, 193, 204, 219
power, 105
removable, 221-23
Range of movement or reach, 12, 14, 42, 44, 45, 46, 136, 137, 144, 168, 173, 174, 177, 179, 183, 186
Reach limitations, 13, 14, 173
Readily achievable (definition, discussion of term), 36, 200, 202, 229
Reasonable accommodation (definition, discussion of term) 34, 35, 196
Recreational facilities, 159, 160, 162, 170, 187-93
Rehabilitation, see *Renovation and rehabilitation*
Rehabilitation Act of 1973, *see Legislation*
Religious entities, 39
Renovation and rehabilitation, 200-24
Rest areas, 52, 57, 63, 67
Restaurants, 35, 162, 170, 182-83, 232
Rest rooms, *see Toilet rooms*
Sailing, *see Boating*
Scoping provisions, 37, 39
Security, 128, 157, 179
Sensory limitations, *see Hearing limitations, Thermal and tactile sensitivity limitations, and Visual impairments*

Shower stalls, 113-15, 235
residential, 134, 152, 153, 154
roll-in, 114, 178
transfer, 113, 115
Sidewalks, *see Walkways*
Signage, 234, 235, 238, 247, 248
interior, 56, 89, 123, 124, 169, 174, 179, 186, 217
site, 53, 55, 56, 176, 189
Site entrances, 51
Special shoes, 18
Stadiums, 162, 184, 190
Stairs, 234
indoor, 86, 92, 202, 206, 213
nosings, 65, 66, 92, 93, 212
outdoor, 61, 65, 66, 72, 74, 190, 204, 205
risers, 65, 92, 212, 213
Storage, 173, 174, 179
residential, 131, 132, 135, 144, 150, 155
Sports arenas, 162, 184, 190
Subways, 194
Support canes, *see Canes, support*
Swimming, 192-93
Tables
indoor, 165, 166, 171, 172, 182
outdoor, 73, 188, 191
Telecommunication Devices for the Deaf (TDDs), *see Communication aids*
Telephones
private, 134, 149, 152, 156, 180
public, 116, 119, 120, 166, 200, 218, 229, 235
Temporary limitations, 10, 12, 17
Theaters, 163, 231, 232
Thermal and tactile sensitivity limitations, 15
Thresholds, 83, 210
Toilet rooms, 79, 106-15, 166, 176, 179, 180, 186, 188, 189, 198, 200, 201, 202, 210, 215-17, 229, 230, 234, 241
residential, 129, 132-34, 148, 151-54, 155, 156
Toilets and stalls, 106, 108-10, 151, 153, 215-17, 219, 229, 234
also see Accessories, toilet
Trains, 194, 195
Transient lodging, *see Hotels and motels*
Transportation facilities, 34, 35, 162, 194, 195
Uniform Federal Accessibility Standards (UFAS), 31, 37, 38, 42, 221, 246
Uniformity in standards, 38
U.S. Census, 24, 25
Universal design, 10, 11, 12, 106, 145
parking spaces, 55
Urinals, 106, 111
Vegetation, 64, 69-71, 188
Vending machines, 116, 121, 177
Vertical clearances
interior, 88, 90
knee space, 107, 110, 116, 132, 133, 137, 138, 139, 140, 141, 142, 143, 150, 165, 166, 171, 173, 177, 182, 197, 216
vehicular, 51, 55, 183, 184
Vestibules, 81, 128, 204, 209
privacy in toilet rooms, 107, 217
Visual communication, 16, 165, 170, 197
Visual impairments, 11, 15, 83, 85, 87, 88, 92, 93, 99, 100, 104, 105, 107, 119, 120, 122, 123, 124, 130, 135, 136, 140, 166, 168, 169, 170, 171, 174, 176, 177, 180, 182, 187, 192, 197, 201, 213, 218, 223
statistics, 24, 25, 26
Walks, power, 105
Walkways, 50, 51, 52, 57, 58, 63, 65, 67, 68, 72, 74, 128, 179, 193, 201, 203, 204, 208
Waiting areas, 53, 194
Walkers, walking aids, 18, 19, 43, 58, 81, 87, 155, 184
Water fountains, *see Drinking fountains*
Wheelchairs
dimensions of, 48, 89, 175
dimensions in, 42, 44-47, 74
storage of, 155, 158
types, 18, 19, 46, 48
Wheelchair lifts, 103, 221
Wheelchair symbol, *see international Symbol of Access*
Wheel stops, 64, 67, 91
Windows, 134, 135, 148, 155
Worksite modifications, 34, 35, 196
Worship, places of, 163, 165, 232

The photo on the inside back cover, taken at the Columbus Metropolitan Library, was the outside cover for the first two editions of *Access for All.* The photo was chosen for its visual impact, but it should be noted that a recent renovation and addition have made the building truly "Open to All."